COMPACT SYNTHESIZED VHF FM TWO-WAY RADIO

TK-705D/DN/DH

SERVICE MANUAL

REVISED

KENWOOD

© 1992-6 PRINTED IN JAPAN
B51-8107-10(O)1115

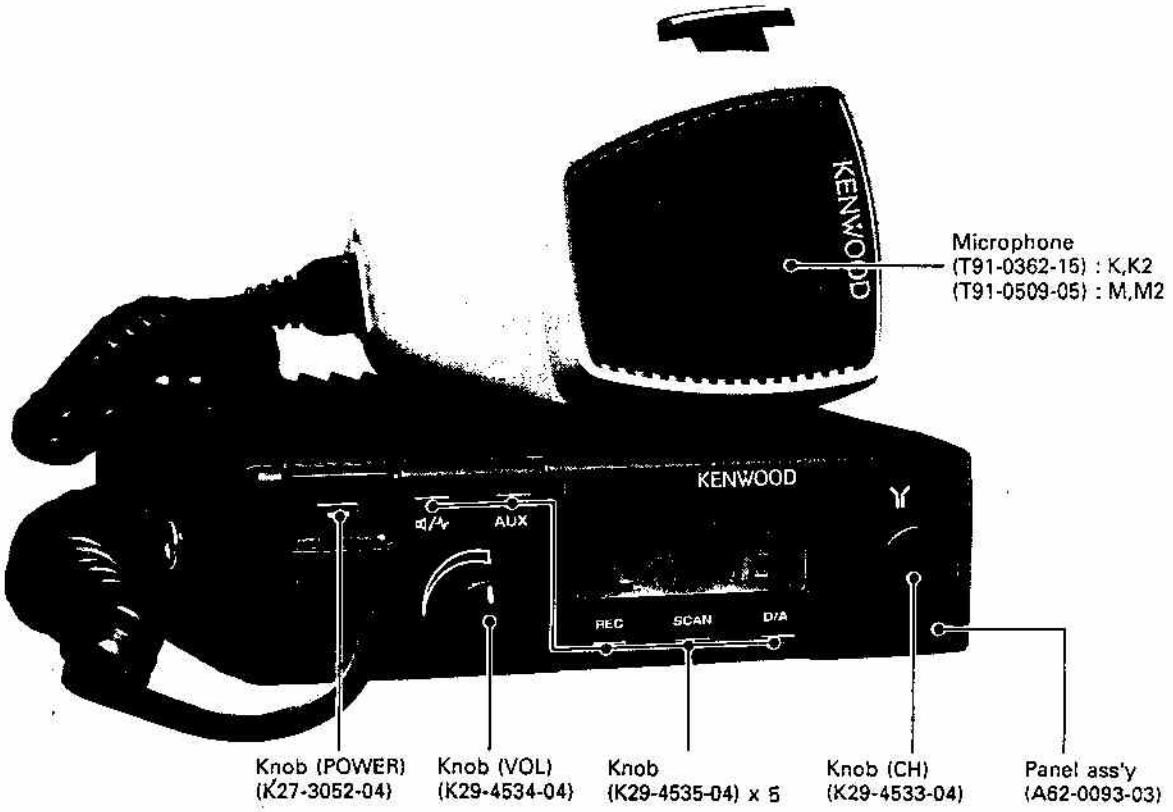

Photo is K,K2 type.

CONTENTS

GENERAL 2
SYSTEM SET-UP 4
INSTALLATION 5
MODIFICATION 6
REALIGNMENT 7
DISASSEMBLY FOR REPAIR 21
LEVEL DIAGRAM 22
BLOCK DIAGRAM 23
CIRCUIT DESCRIPTION 25
SEMICONDUCTOR DATA 31
DESCRIPTION OF COMPONENTS 33
PARTS LIST 34
EXPLODED VIEW 46
PACKING 47
ADJUSTMENT 48
TERMINAL FUNCTIONS 52
CIRCUIT DIAGRAMS/PC BOARD VIEWS
PLL (X58-371X-XX) 53
APC (X59-3130-00) 55
HPF (X59-3740-11) 55
TX-RX UNIT (X57-3860-XX) 56
SCHEMATIC DIAGRAM 59
KVP-1 (DIGITAL RECORDING UNIT) 63
KPG-4 (PROGRAMMING INTERFACE) 69
SPECIFICATIONS ..... BACK COVER

GENERAL

INTRODUCTION

SCOPE OF THIS MANUAL

This manual is intended for use by experienced technicians familiar with similar types of commercial grade communications equipment. It contains all required service information for the equipment and is current as of the publication date. Changes which may occur after publication are covered by either Service Bulletins or Manual Revisions. These are issued as required.

ORDERING REPLACEMENT PARTS

When ordering replacement parts or equipment information, the full part identification number should be included. This applies to all parts: components, kits, or chassis. If the part number is not known, include the chassis or kit number of which it is a part, and a sufficient description of the required component for proper identification.

PERSONNEL SAFETY

The following precautions are recommended for personnel safety:

- DO NOT transmit if someone is within two feet (0.6 meter) of the antenna.
- DO NOT transmit until all RF connectors are verified secure and any open connectors are properly terminated.
- SHUT OFF and DO NOT operate this equipment near electrical blasting caps or in an explosive atmosphere.
- All equipment should be properly grounded before power-up for safe operation.
- This equipment should be serviced by a qualified technician only.

FCC COMPLIANCE AND TYPE ACCEPTANCE NUMBERS

Type acceptance number	Frequency range	Compliance
ALHTK-705D-1	150~174MHz	Parts 22, 74 and 90
ALHTK-705DH-1	150~174MHz	Parts 22, 74 and 90

1. POWER-UP

To turn on the radio, press the power switch (IO). The channel indicator will illuminate to indicate power is ON.

2. TO RECEIVE

Operation	Procedure
1. Disable QT, DQT (if so equipped)	Remove microphone from its hanger.
2. Unsquelch radio	Press the MONITOR switch (🔊 /∿). Keep the key down for 2 seconds.
3. Set VOLUME control	Adjust VOLUME control for a normal listening level.
4. Set SQUELCH control	Press the MONITOR switch (🔊 /∿) again.
5. Select operating frequency. (Multichannel models only)	Rotate CH selector switch to desired channel.
The radio will now receive all traffic on the selected channel.	
6. Enable QT, DQT (if so equipped)	Insert microphone back into its hanger.
You will now hear messages for your system only.	

3. TO TRANSMIT

Operation	Procedure
1. Disable QT, DQT (if so equipped)	Press the MONITOR switch (🔊 /∿) or remove microphone from hanger.
2. Select operating frequency. (Multichannel models only)	
3. LISTEN	DO NOT TRANSMIT if channel is in use.
4. Key transmitter	Press and hold the microphone PTT switch. The LCD on the front panel will indicating the transmitter is ON ( ).
5. Transmit message	Hold microphone at about 2 inches distance and speak at a normal voice level. Keep transmissions brief.
6. Receive reply	Release the microphone PTT switch.
7. Enable QT, DQT at end of the conversation. (if so equipped)	Press the MONITOR switch (🔊 /∿) and replace the microphone into its hanger.

GENERAL

PRE-INSTALLATION CONSIDERATIONS

1. UNPACKING

Unpack the radio from its shipping container and check for accessory items. If any item is missing, please contact KENWOOD immediately.

2. LICENSING REQUIREMENTS

Federal regulations require a station license for each radio installation (mobile or base) be obtained by the equipment owner. The licensee is responsible for ensuring transmitter power, frequency, and deviation are within the limits permitted by the station license.

Transmitter adjustments may be performed only by a licensed technician holding an FCC first, second or general class commercial radiotelephone operator's license. There is no license required to install or operate the radio.

3. PRE-INSTALLATION CHECKOUT

3-1. Introduction

Each radio is adjusted and tested before shipment. However, it is recommended that receiver and transmitter operation be checked for proper operation before installation.

3-2. Testing

The radio should be tested complete with all cabling and accessories as they will be connected in the final installation. Transmitter frequency, deviation, and power output should be checked, as should receiver sensitivity, squelch operation, and audio output. QT equipment operation should be verified.

4. PLANNING THE INSTALLATION

4-1. General

Inspect the vehicle and determine how and where the radio antenna and accessories will be mounted.

Plan cable runs for protection against pinching or crushing wiring, and radio installation to prevent overheating.

4-2. Antenna

The favored location for an antenna is in the center of a large, flat conductive area, usually at the roof center. The trunk lid may also provide a good antenna location. If the trunk lid is prefered, bond the trunk lid and vehicle chassis using ground straps to ensure the lid is at chassis ground.

4-3. Radio

The universal mount bracket allows the radio to be mounted in a variety of ways. Be sure the mounting surface is adequate to support the radio's weight. Allow sufficient space around the radio for air cooling. Position the radio close enough to the vehicle operator to permit easy access to the controls when driving.

4-4. DC Power and wiring

1. This radio may be installed in negative ground electrical systems only. Reverse polarity will cause the cable fuse to blow. Check the vehicle ground polarity before installation to prevent wasted time and effort.
2. Connect the positive power lead directly to the vehicle battery positive terminal. Connecting the Positive lead to any other positive voltage source in the vehicle is not recommended.

CAUTION:
If DC power is to be controlled by the vehicle ignition switch, a switching relay should be used to switch the positive power lead. The vehicle ignition switch then controls DC to the relay coil.

---

3. Connect the ground lead directly to the battery negative terminal.
4. The cable provided with the radio is sufficient to handle the maximum radio current demand. If the cable must be extended, be sure the additional wire is sufficient for the current to be carried and length of the added lead.

5. INSTALLATION PLANNING - CONTROL STATIONS

5-1. Antenna system

Control station. The antenna system selection depends on many factors and is beyond the scope of this manual. Your KENWOOD dealer can help you select an antenna system that will best serve your particular needs.

5-2. Radio location

Select a convenient location for your control station radio which is as close as practical to the antenna cable entry point. Secondly, use your system's power supply (which supplies the voltage and current required for your system). Make sure sufficient air can flow around the radio and power supply to allow adequate cooling.

SERVICE

This radio is designed for easy servicing. Refer to the schematic diagrams, printed circuit board views, and alignment procedures contained in this manual.

SYSTEM SET-UP

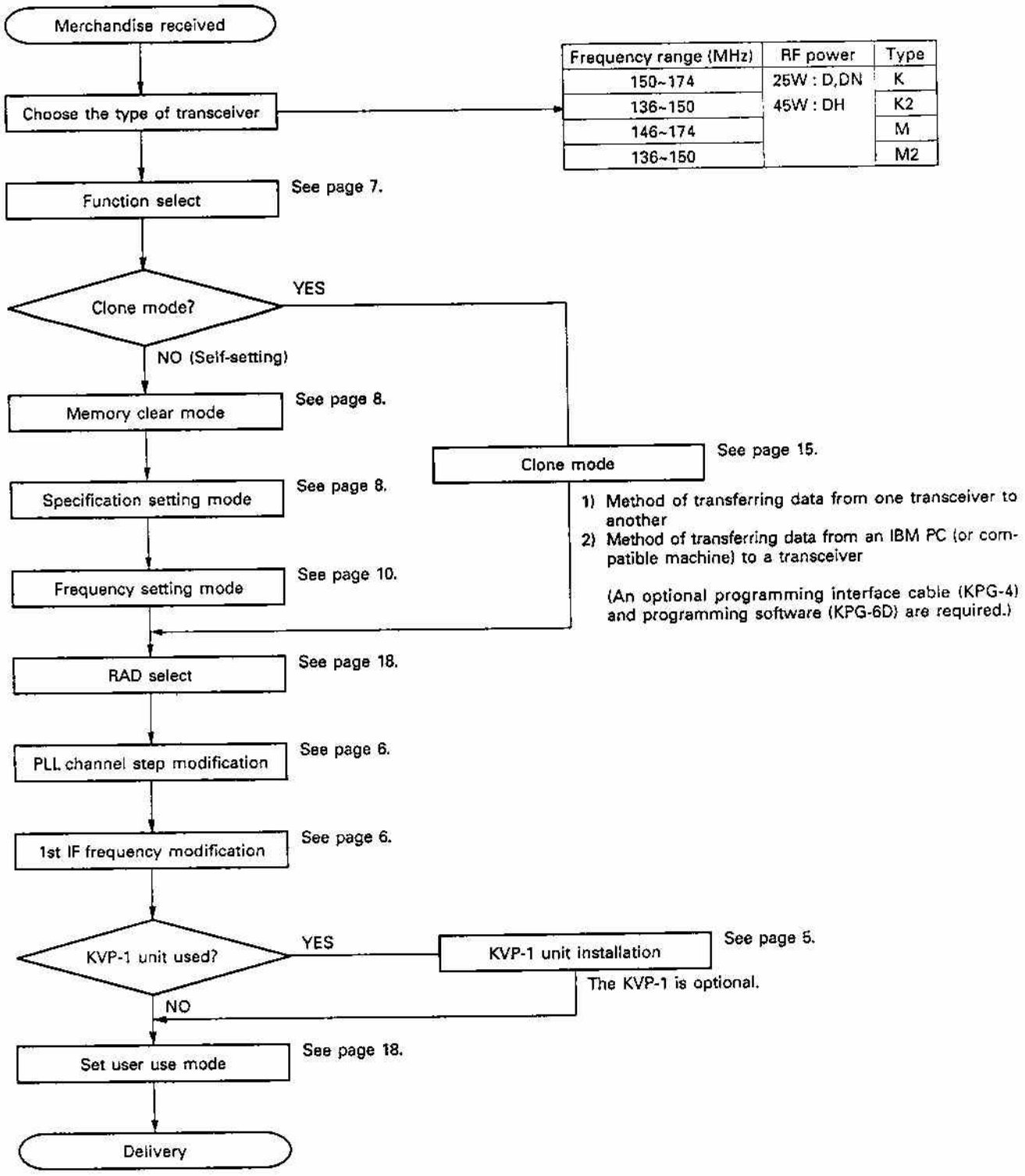

Frequency range (MHz)	RF power	Type
150~174	25W : D,DN	K
136~150	45W : DH	K2
146~174		M
136~150		M2

INSTALLATION

KVP-1 Unit Installation

1. Remove the top cover of the radio.
2. Shift the connector with a lead going to the speaker toward the final module (❶).

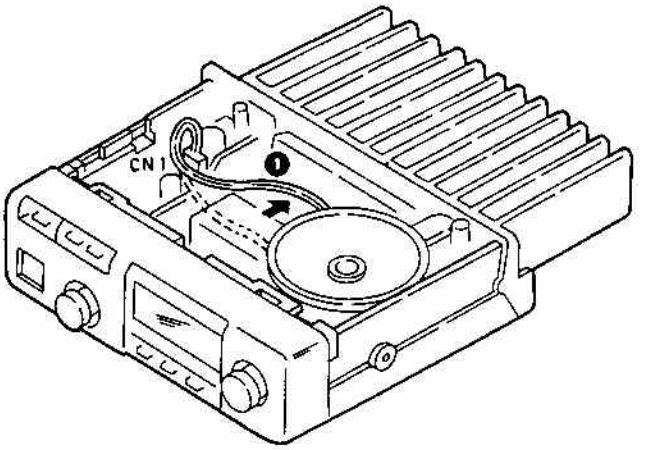

3. Insert the supplied W1 (E37-0151-05) connector (❷) with lead into CN1 of the unit.
4. Remove the double-sided adhesive pad (❸) from the unit.

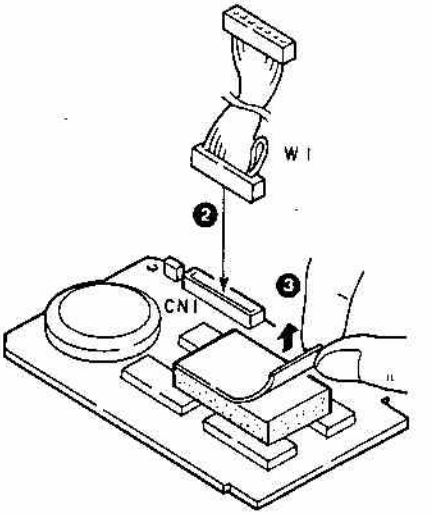

5. Insert the W1 connector (❹) with lead into CN204 of the radio.
6. Put the unit on the radio shield case (❺) and secure it to the radio frame with a single screw (❻).
7. Push the unit from above (❼) until it touches the shield case.
8. Put the top cover of the radio back on.

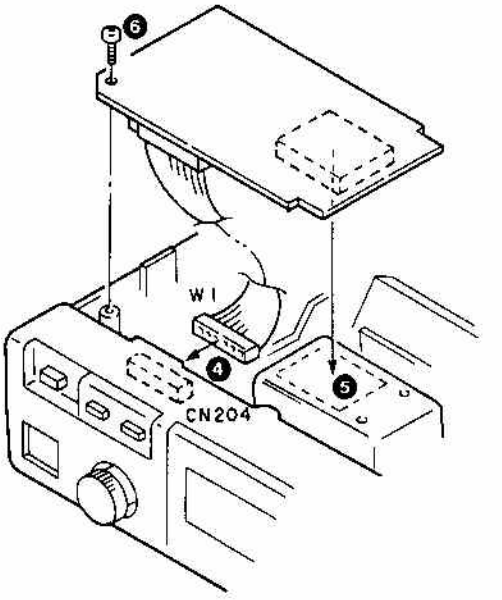

MODIFICATION

PLL Channel Step Modification

The PLL channel step frequency can be changed to 5kHz (6.25kHz) or 10kHz (12.5kHz). (It can be changed in four steps.)

Switching between 5 and 6.25kHz or between 10 and 12.5kHz is done each time the SCAN key is pressed in the receive/transmit frequency setting mode. (see page 10.)

Switching between 5 (6.25) and 10 (12.5) kHz can be done by setting R233 (RK73FB2A473J: 47kΩ) and R237 (R92-0670-05: 0Ω) of the TX-RX unit (B/2).

	R233	R237
5KHz, 6.25KHz	X	○
10kHz, 12.5kHz	○	X

X : Removed, ○ : Installed

(A chip is installed where R237 goes at the factory.)

TX-RX UNIT (B/2) Foil side view

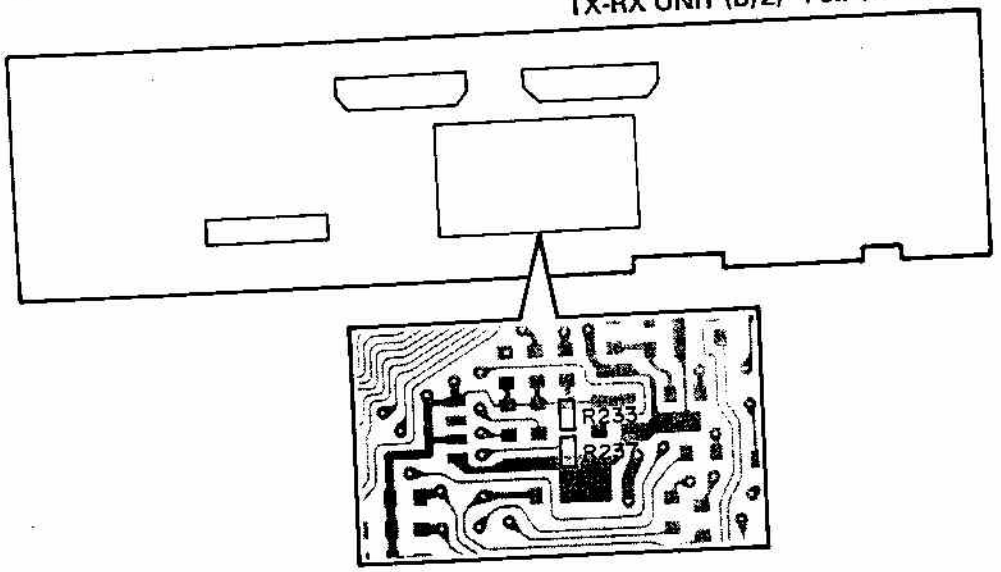

1st IF Frequency Modification

1st IF frequency is set by changing the chip resistors on the TX-RX unit (B/2).

IF	R235 (47kΩ)	R239 (0Ω)
21.4MHz	X	○
34.4MHz	○	X

X : Removed, ○ : Installed

TX-RX UNIT (B/2) Foil side view

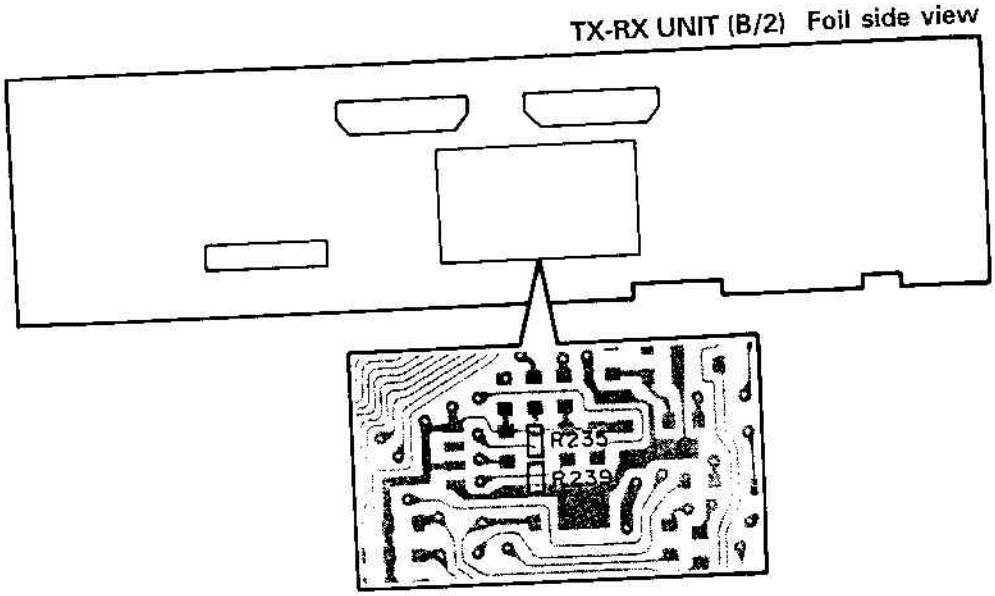

REALIGNMENT

Function Select

Function select has SET and USE. One of the modes 1 to 5 can be selected in either case.

Test data is stored in the EEPROM of the TK-705D/DN/DH at the factory. If new data (channel frequencies, signaling, AUX, scan, etc.) needs to be written into the EEPROM, use the specification setting mode or frequency setting mode. Select another mode as required.

1. Modes

1) Setting

Function (CN8)		Modes	Setting
SET	USE		
○	–	EEPROM clear mode	Clear all EEPROM data and enter the specification setting mode.
○	–	Specification setting mode	Specify items. (*1)
○	–	Frequency setting mode	Set each channel frequency, signaling, AUX, and scan data.
○	○	Clone mode	Transfer data from the transceiver to another transceiver, or from an IBM PC to a transceiver. (*2)
○	○	User use mode	The user operates the transceiver. (*3)

○ : The mode can be entered. – : The mode cannot be entered.

*1 : The initial frequency (band to be used), time-out timer, busy channel lockout, D/A key operation on/off, microphone hook, and priority are set.
*2 : The data specified in the specification and frequency setting modes is transferred.
*3 : After items have been confirmed or set in each mode, set this mode for shipment.

2) After SET or USE has been set, each mode can be entered by the following operation.

Mode	Operation
User use mode	Switch the power on without pressing a key.
Clone mode	Hold down the AUX and MONI keys, switch the power on, and keep the keys down for two seconds. A beep is heard. If the AUX key is released, data can be transferred from one transceiver to another. If the MONI key is released, data can be transferred from an IBM PC to a transceiver.
Specification setting mode	Hold down the AUX and SCAN keys, switch the power on, and keep the keys down for two seconds.
Frequency setting mode	Hold down the AUX and D/A keys, switch the power on, and keep the keys down for two seconds.
EEPROM clear mode	Hold down the AUX, D/A and SCAN keys, switch the power on, and keep the keys down for two seconds.

2. Setting function select SET and USE

To set the function to SET or USE, reconnect the shorting plug (J5) of connector CN8 on the TX-RX unit (A/2). (It is factory-set to SET.)

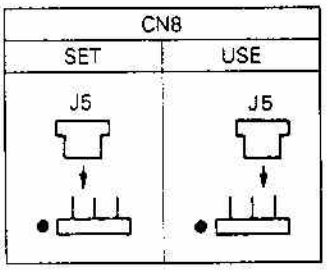

Note : Remove the plug (J5) from above.

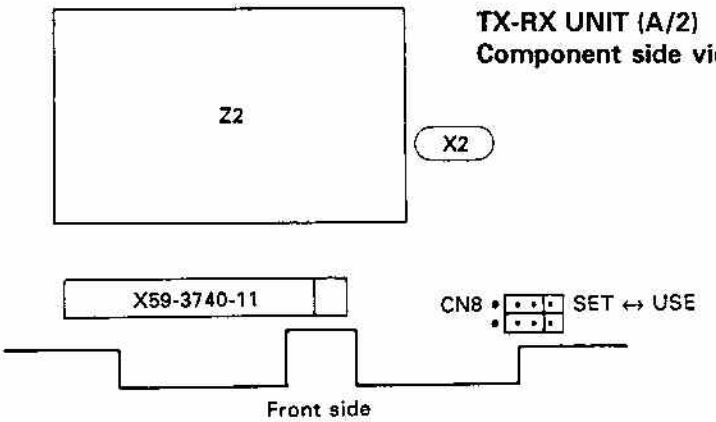

TX-RX UNIT (A/2)
Component side view

REALIGNMENT

Memory Clear Mode

All the contents of the memory (EEPROM) are cleared in the memory clear mode.

- Confirm that the CN8 short connector is set to the SET side.
- Hold down the AUX, D/A, and SCAN keys, turn the POWER switch on, and keep the keys down for two seconds to clear all the contents of the EEPROM.
- After the EEPROM is cleared, the specification setting mode is entered.

Specification Setting Mode

1. In the specification setting mode, the initial frequency (the band to be used), time-out timer (TOT), busy channel lockout, D/A key on/off, microphone hooking, and priority are specified.
2. Each of these settings is selected by turning the encoder. When the PTT key is pressed, data is written into the EEPROM. To correct data, switch the power off and set new data again. (If data is corrected midway through entry, the setting before switching the power off remains in the EEPROM.)
3. All the items should be set in the specification setting mode until End is displayed.
4. To enter the specification setting mode, make sure that connector CN8 is set to the SET position (• mark). Hold down the AUX and SCAN keys, turn the POWER switch on, and keep the keys down for two seconds. Three beeps are heard and this mode is set.

1. Write method (See the flowchart.)

Each mode can be set in order while observing the LCD, as shown in the flowchart.

1) Initial frequency setting mode

In this mode, the initial band display changes as follows when the encoder is turned. Set the frequency to 150,000.

→150MHz↔250MHz↔350MHz↔450MHz←

When the PTT key is pressed, the TOT setting mode is entered.

2) TOT setting mode

When the encoder is turned, the TOT time setting changes as follows. Set the necessary time.

→ OFF ↔ 30sec ↔ 60sec ↔ 90sec ←
→ 180sec ↔ 120sec ←

When the PTT key is pressed, the next busy channel lockout setting mode is entered.

3) Busy channel lockout setting mode

When the encoder is turned, the busy channel lockout function toggles on and off as follows. Set it on or off.

ON ↔ OFF

ON : Busy channel lockout function is available.
OFF : Busy channel lockout function is not available.

When the PTT key is pressed, the mode changes to the next D/A key operation on/off mode.

4) D/A key on/off setting mode

- The D/A key sets whether to receive the receive frequency written in the channel during scanning.
- The channel with a priority set can be set to the DELETE or ADD state, but the DELETE operation does not take place. (The priority channel operation is given precedence.)
- When the encoder is turned, the D/A key display changes as follows. Set the necessary function.

ON ↔ OFF

ON : User can change the setting.
OFF : User cannot change the setting.

When the PTT key is pressed, the next microphor hooking on/off setting mode is entered.

5) Microphone hooking on/off setting mode

- **Function when ON is set**

When the microphone is offhook, the monitor mode is set regardless of whether the MONI key is on or off. The monitor indicator ◁ on the LCD shows whether the MONI key is on or off; it does not indicate whether the microphone is onhook or offhook.

Transmission does not take place when the PTT key is pressed with the microphone onhook.

- **Function when OFF is set**

Transmission takes place whether the microphone is onhook or offhook.

When the encoder is turned, the microphone hooking display changes as follows. Set the necessary function.

ON ↔ OFF

When the PTT key is pressed, the next priority operation setting mode is entered.

REALIGNMENT

6) Priority operation setting mode

- There are two types of priority: fixed and variable. If the priority is fixed, a channel is determined in the frequency setting mode. (Only one channel can be specified.) If the priority is variable, the channel immediately before the SCAN switch is turned on becomes a priority channel.
- When the encoder is turned, the display changes as follows. Set the necessary function.

FI ↔ US

FI : Fixed priority
US : Variable priority

When the PTT key is pressed, .End appears on the LCD, and the specification setting mode is terminated.

2. Flowchart of the specification setting mode

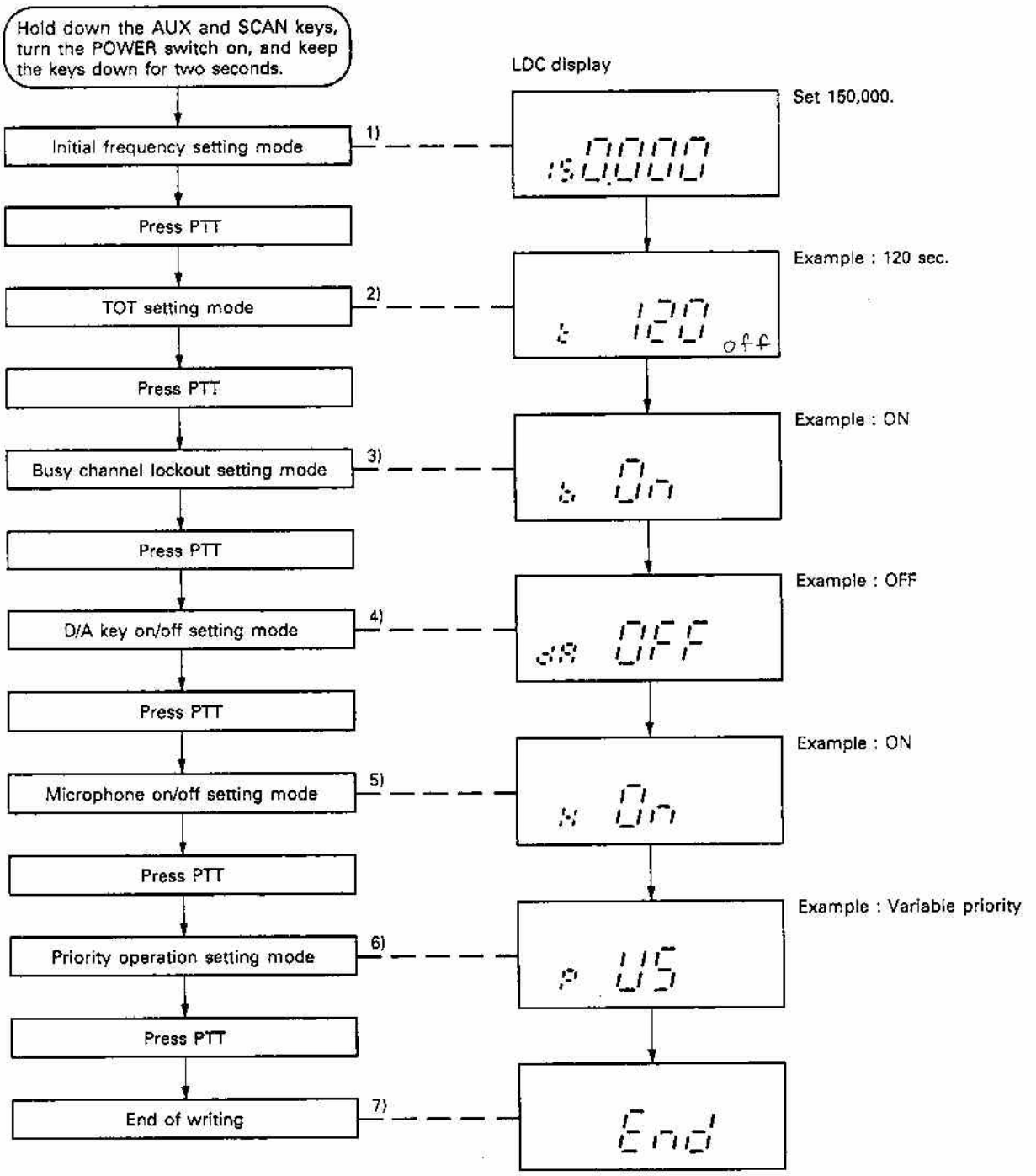

REALIGNMENT

Frequency Setting Mode

1. In the frequency setting mode, the transmit/receive frequency, QT (CTCSS)/DQT, AUX condition, and SCAN condition are specified.
2. To enter the frequency setting mode, make sure that connector CN8 is set to the SET position (• mark). Hold down the AUX and D/A keys, turn the POWER switch on, and keep the keys down for two seconds. Four beeps are heard and the mode is set. When the mode is entered, the one-channel receive frequency setting mode is set first. Whenever the PTT key is pressed after setting a frequency, the mode changes as shown in flowchart.

1. Flowchart of frequency setting mode

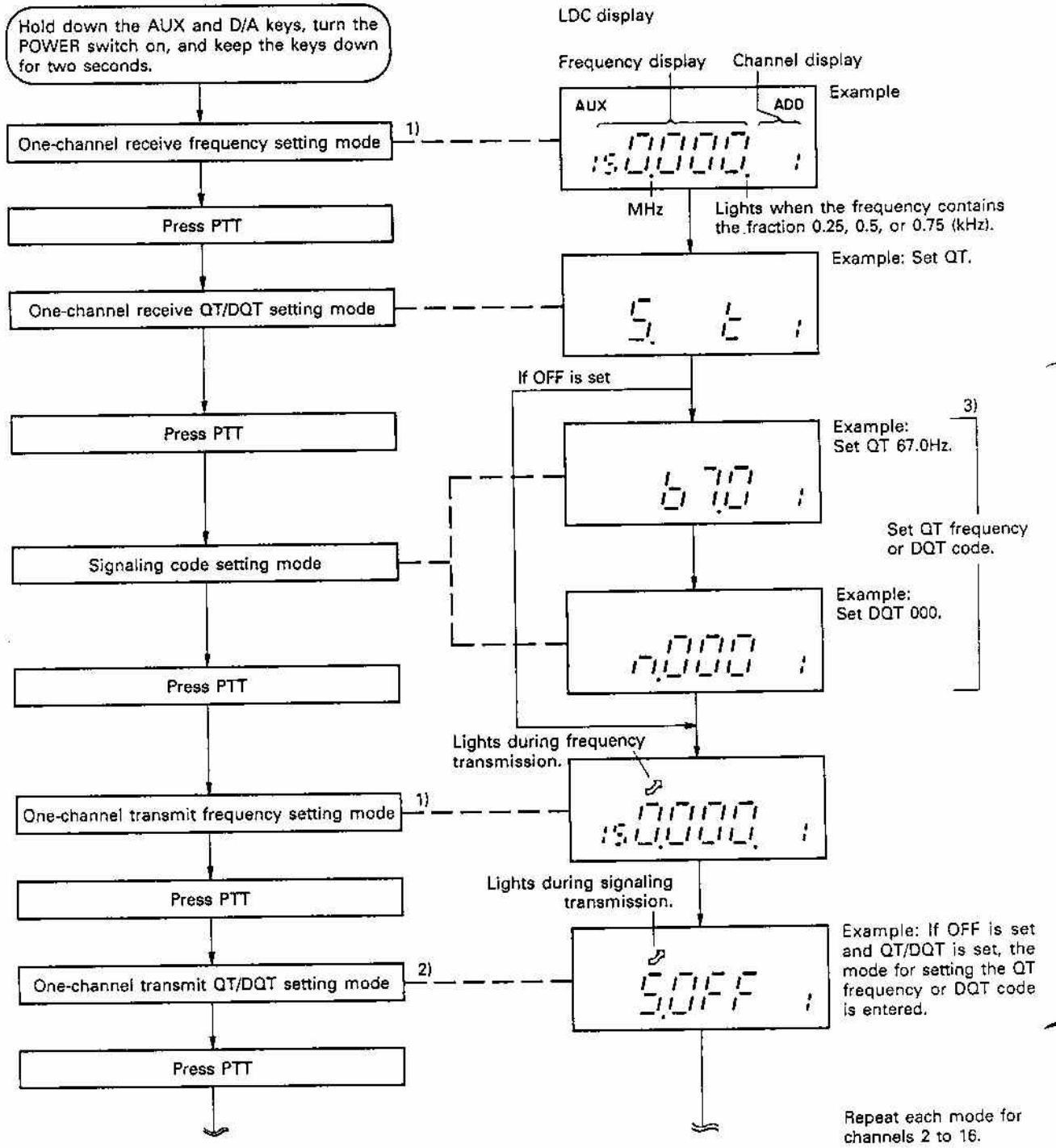

REALIGNMENT

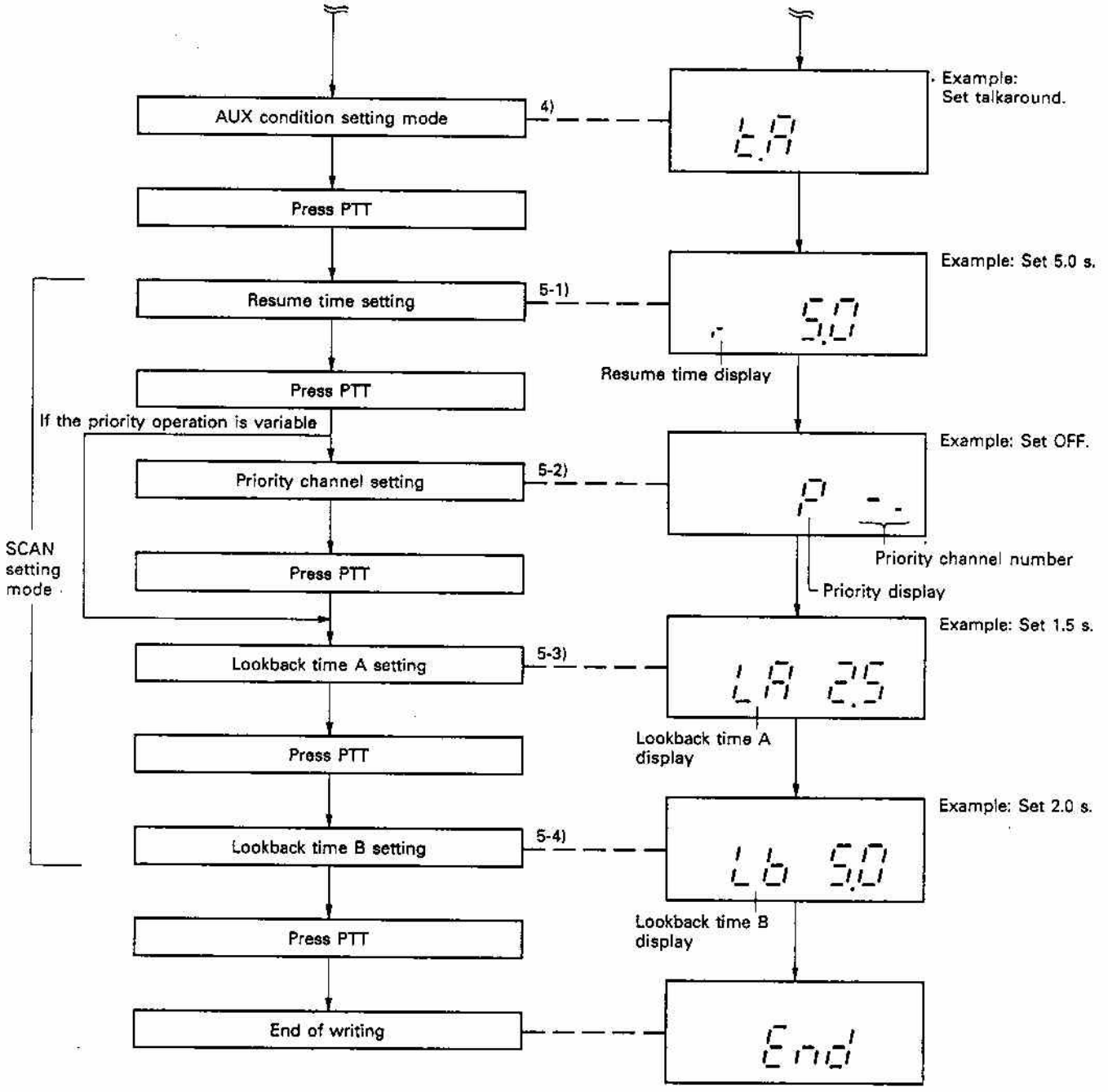

REALIGNMENT

2. Setting method (See the flowchart page 10)

The setting method in each mode is described below. Perform operations in the order given in the flowchart.

1) Receive/transmit frequency setting mode

- **LCD**

Channel display:

Channel number of the channel to be set

Frequency display:

(1) If there is data stored in the EEPROM
The frequency stored in the EEPROM is displayed.

(2) If there is no data stored in the EEPROM
RX If one channel is used, the initial frequency (150,000)
If one channel is not used, dots (_ _ - - - -) are displayed, and when the encoder is turned, the receive frequency of one channel is displayed.
TX Dots (_ _ - - - -) are displayed, and when the encoder is turned, the receive frequency of that channel is displayed.

Other display:

The transmit indicator lights only when transmit data is input.

- **Operation**

1. When the encoder is turned, the display frequency changes (in steps). When the encoder is turned while the AUX key is being held down, the display frequency changes in MHz units.
2. Each time the SCAN key is pressed, the frequency display step is changed.
   If port 30 is high : The frequency changes between 10kHz and 12.5kHz.
   If port 30 is low : The frequency changes between 5kHz and 6.25kHz.
3. RX only
   - Each time the D/A key is pressed, the display toggles between ADD and DELETE.
     If ADD indicator is lit : ADD function
     If ADD indicator is off : DELETE function
   - Each time the REC key is pressed, the auxiliary function toggles on or off.
     If AUX indicator is lit : Set
     If AUX indicator is off : Not set
4. When the PTT key is pressed, the displayed frequency is set as the receive or transmit frequency for that channel, and the next receive or transmit QT/DQT setting mode is set.

Note : When the step is changed between 6.25kHz and 12.5kHz, the dot lights if the frequency contains the fraction 0.25, 0.5, or 0.75kHz, and it can be set, but the frequency is not displayed.

2) Receive and transmit QT/DQT setting mode

QT (CTCSS), DQT, or signaling off (OFF) is selected in this mode.

- **LCD**

Channel display:

Channel number of the channel to be set

Frequency display:

(1) If there is data stored in the EEPROM
The signaling type stored in the EEPROM is displayed.

(2) If there is no data stored in the EEPROM
OFF is displayed.

Other display:

The transmit indicator lights only when transmit data is input.

- **Operation**

1. When the encoder is turned, the display changes between QT, DQT, and signaling off (OFF). Set the necessary type.

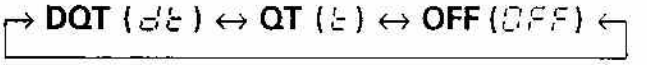

The letters in parentheses are displayed on the LCD.

2. If OFF is selected for signaling and then the PTT key is pressed, the transmit or receive frequency setting mode is entered. The transmit QT/DQT setting mode ends after 16 channels, and the AUX condition setting mode is entered.
   If QT/DQT is selected and then the PTT key is pressed, the next receive and transmit QT frequency or DQT setting mode is entered.

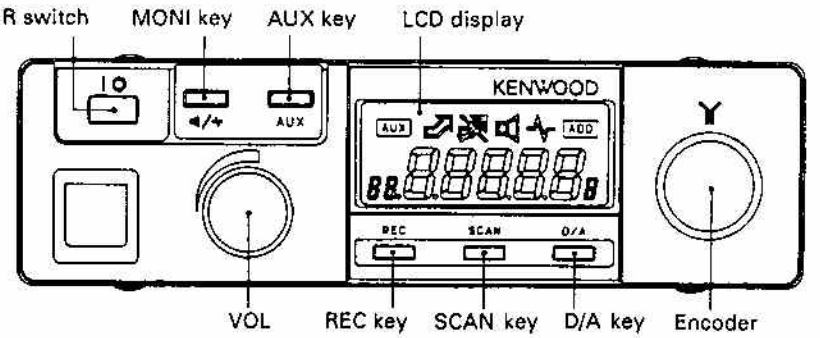

REALIGNMENT

3) QT frequency/DQT code setting

• **LCD**

Channel display:
Channel number of the channel to be set

Frequency display:
(1) If there is data stored in the EEPROM
The QT frequency/DQT code stored in the EEPROM is displayed.
(2) If there is no data stored in the EEPROM
QT ..... 67.0 (Hz) is displayed.
DQT ..... 000 is displayed.

Other display:
The transmit indicator lights only when transmit data is input.

• **Operation**

1. Each time the encoder is turned,
QT .....The frequency changes from 67.0 to 250.3Hz in 0.1-Hz steps.
DQT .....The code changes from 000 to 777 (octal) in digits.
2. Hold down the AUX key and turn the encoder.
QT .....The frequency changes by 1Hz or more.
DQT .....The two or more digits of the code change.
3. Hold down the REC key and turn the encoder.
QT .....The frequency changes by 10Hz or more.
DQT .....The third digit of the code changes.
4. Each time the SCAN key is pressed, the DQT code changes between normal and inverse.

LCD display

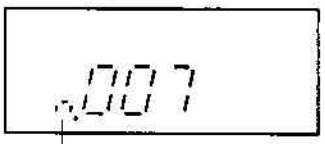

Example: Normal code of 007

Normal display

Example: Inverted code of 007

Inverted display

5. When the PTT key is pressed, the displayed QT frequency/DQT code is set as the QT frequency/DQT code for that channel, and the next transmit or receive frequency setting mode is set.

4) AUX condition setting mode

In the AUX condition setting mode, talkaround, digital recording system (DRS), 2TONE, or DTMF is selected.

• **Initial LCD display**

1. If there is AUX data stored in the EEPROM
The AUX data stored in the EEPROM is displayed.
2. If there is no data stored in the EEPROM
Talkaround is displayed.

• **Operation**

1. When the encoder is turned, the display changes between talkaround, DRS, 2TONE, and DTMF. Set the necessary type.

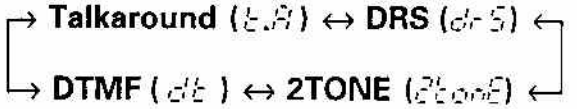

The letters in parentheses are displayed on the LCD.

2. When the PTT key is pressed, the displayed AUX condition is set, and the next SCAN setting mode is entered.

5) SCAN setting mode

In the SCAN setting mode, the resume time, priority channel, lookback time A, and lookback time B are written in the order listed.

5-1) Resume time setting

• **Initial LCD display**

1. If the resume time is stored in the EEPROM
The resume time stored in the EEPROM is displayed.
2. If there is no data stored in the EEPROM
1.0 (sec) is displayed.

• **Operation**

1. When the encoder is turned, the resume time can be selected. Set the necessary data.
15 steps: 1.0, 1.5, 2.0, 2.5, 3.0, 3.5, 4.0, 4.5, 5.0, 5.5, 6.0, 6.5, 7.0, 7.5, 8.0 (seconds)
2. When the PTT key is pressed, the displayed resume time is set, and the next priority channel can be set.

Note : If the priority is set to variable (US) in the specification setting mode, lookback time A can be set.

REALIGNMENT

Clone Mode

There are two clone modes. Select the appropriate mode as required.

- Connect two transceivers, and transfer the contents of the EEPROM of one transceiver to the the EEPROM of the other.
- Transfer data from an IBM PC or compatible machine to the EEPROM of a transceiver.

Note : This mode is valid regardless of whether CN8 is set to SET or USE.

1. Operation

1) Data transfer from one transceiver to another

1. Hold down the AUX and MONI keys on the two transceivers, turn the POWER switch on, and keep the keys down for two seconds. One beep is heard, then, when the AUX key is released, the LCD indicates the clone mode.

LCD display

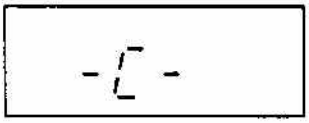

2. Connect two transceivers in the clone mode with a microphone cable.

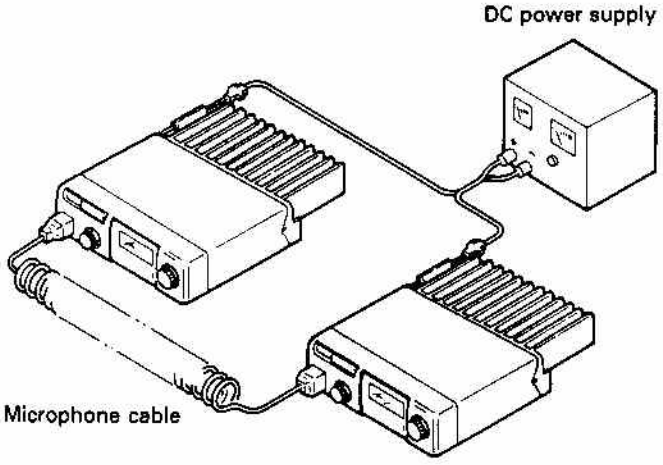

Fig. 1

3. When the MONI key on the transceiver to which data is to be transmitted is pressed, the LCD shows the transmit indicator ( ), and data is transferred to the receiving transceiver.

LCD display

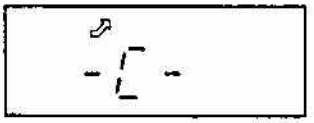

Transmitting transceiver

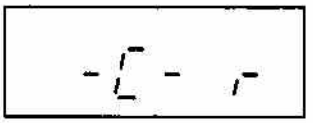

Receiving transceiver

4. When the data transfer ends (about 40 seconds), both transceivers beep and display End.

LCD display

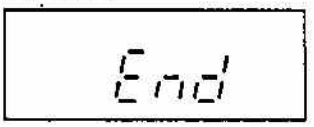

5. If the MONI key is pressed while End is displayed, the condition in 1 returns.

2) Data transfer from IBM PC to transceiver

- **Preface**

The TK-705D/DN/DH transceiver is programmed by using a personal computer, programming interface (KPG-4), and programming software (KPG-6D).

The programming software can be used with ar IBM PC or compatible. Figure 2 shows the setup of ar IBM PC for programming.

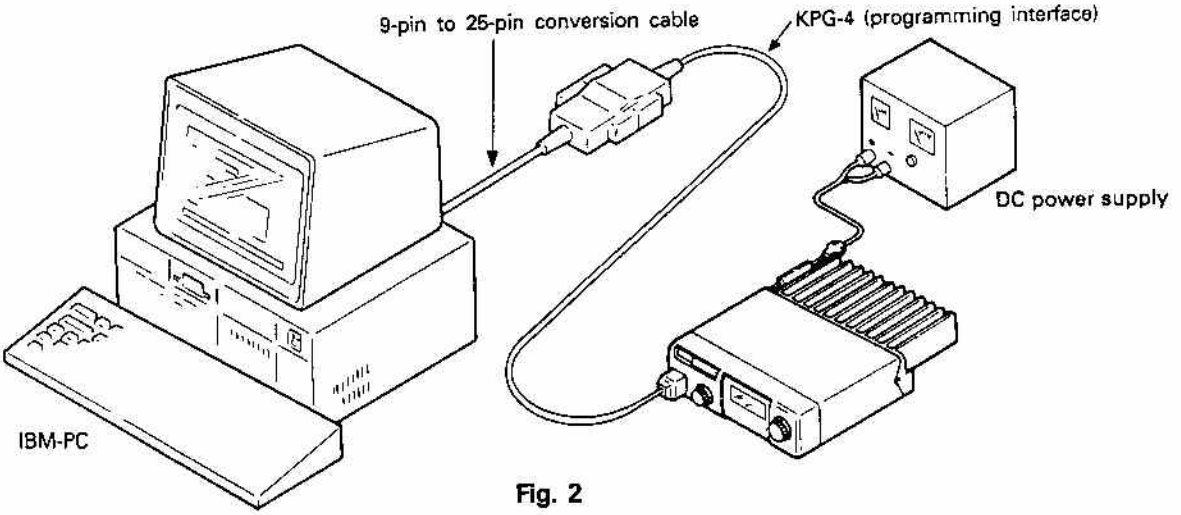

Fig. 2

- **KPG-4 description**
  (P.C. programming interface cable : Option)

The KPG-4 is required to interface the TK-705D/DN/DH to the computer. It has a circuit in its D-subconnector (25-pin) case that converts the RS-232C logic level to the TTL level.

The KPG-4 connects the front panel modular microphone connector of the TK-705D/DN/DH to the computers RS-232C serial port.

- **Programming software description**

The KPG-6D Programming Disk is supplied in 5-1/4" and 3-1/2" disk format. The Software on this disk allows a user to program TK-705D/DN/DH radios via Programming Interface cable (KPG-4).

1. LOADING

This program assumes the user has a basic working knowledge of their particular IBM or IBM compatible computer. Consult your computer and DOS manual for detailed explanations.

2. COMPUTER SETUP (A one time setup procedure - go to step 1, if this has been done.)

This program needs the device driver file ANSI.SYS, in order to run properly. In DOS versions 3.1 and later, the ANSI.SYS file is located as either a file in DOS subdirectory or in the root(main) directory of your hard disk. The computer must be told to install ANSI.SYS at the time DOS is located, i.e., "booted up". This DOS looks for and "executes" during the boot process. It should be located in the directory of your hard disk, c the disk you use to boot up DOS. If a CONFIG. fi does not exist, one can either create one, or, add th directive line to an existing CONFIG.SYS file. Thes can be accomplished by using the EDLIN text edit command discussed below (these processes are ide tical). The main objective is to have a CONFIG.SYS fi that contains a directive to install the ANSI.SYS file.

Ex. : Dos is on C-drive, hard disk. Bring up C-dri prompt C : \ on your computer display.

STEP 1.
The first step is to look at your CONFIG.SYS file to s if a "DEVICE=...ANSI.SYS" line may already exist the To list your CONFIG.SYS file, type the following : TY CONFIG.SYS <enter>
If found here, your computer is setup: insert the KP 6D in drive A and type: KPG6D, then hit <enter> start the program.
If no CONFIG.SYS file exists, or the CONFIG.SYS f did not contain a "DEVICE = ...ANSI.SYS" line, th find the location of your ANSI.SYS file by using t DOS directory command, DIR and chose the appro ate device driver line for STEP 2.
if found in the root directory use :
DEVICE = C : \ ANSI.SYS
if found in the DOS sub-directory use:
DEVICE = C : \ DOS \ ANSI.SYS
(i.e. specify a path in which CONFIG.SYS can f ANSI.SYS)

REALIGNMENT

STEP 2.
Create or edit the CONFIG.SYS file with as follows:

	Hit:	-Remarks-
2-a type: EDLIN CONFIG.SYS	<enter>	
2-b type: 1i	<enter>	
2-c type: DEVICE = (from STEP 1)	<enter>	
2-d hold (<Ctrl>) + press Z key, release	<enter>	(^Z appears)
2-e type: E	<enter>	(C:\prompt re-appears)

(NOTE : This will in no way erase anything or cause harm to the operation of your computer or other software. This only has to be done once.)
*To re-check the CONFIG.SYS file for errors in the "Device=.....ANSI.SYS "line:

	Hit
type: TYPE CONFIG.SYS	<enter>

This will list the contents of the file. If an error is found:

	Hit
type: EDLIN CONFIG.SYS	<enter>
type: 1d	<enter>

This will "delete" the erroneous line 1. Now proceed from STEP 2-b through 2-e and enter the correct "DEVICE=.....ANSI.SYS" line in STEP 2-c
*ALTERNATIVE METHODS FOR EDITING AND/OR CREATING THE CONFIG.SYS FILE:

1. (Easiest) Use your Word Processor software : Load in the CONFIG.SYS file and add the "DEVICE=....ANSI.SYS" line (determined in STEP 1) as line 1, just as if you were interesting a line of text in a letter or memo. Then save the file back to its appropriate drive and/or path.
2. Use the "COPYCON" DOS command to add the "DEVICE=.....ANSI.SYS" line.
   In this case, your whole CONFIG.SYS file must be re-typed letter-for-letter, symbol-for symbol, space-for-space.....BE CAREFUL!!! - as your PC may have quite an extensive CONFIG.SYS file.

Notes : + The above methods should be attempted by an experienced PC user.
+ The "DEVICE=....ANSI.SYS" line does not necessarily have to be line 1 of the CONFIG.SYS file (this is chosen just for convenience), but it MUST BE placed before any "DEVICE = ...DISPLAY.SYS...." line.

STEP 3.
Re-boot DOS for the ANSI.SYS installation to be accomplished.
[TO START THE PROGRAMMING SOFTWARE]

STEP 4.
Insert the KPG-6D disk in drive A or appropriate drive and type : KPG6D. hit <enter>, to start the program.
The main menu of the KPG-6D should appear. Consult the "HELP" screens by pressing F1 to familiarize yourself with the software features.

Note : If STEP 2 and 3 are not done, the main menu display of the KPG-6D will contain random ASCII graphic characters at the top and/or the bottom of the screen. Also the program will "freeze-up" and not function.

To escape from this :
i) hold <Ctrl> + press C key
ii) press "Y" for the "terminate batch file Y/N" query. The drive prompt should appear.
iii) Re-check that STEP 2 and 3 were done correctly.

3. TO INSTALL ONTO ANOTHER FLEXIBLE OR HARD DISK:
The KPG-6D program disk contains a batch file that will automatically copy the entire KPG-6D disk from one disk to anther by typing in one command. This is useful when installing the KPG-6D into your hard disk or making a back-up copy. After DOS is booted up, insert the KPG-6D disk into an appropriate "source" drive and:

	Hit
type: `source drive`	<enter>
Example: a:	<enter>
type: KPG6DINS (space) `target drive`	<enter>
Example: KPG6DINS b:	<enter>

The program and all data files will be loaded into a new sub-directory structure starting at:
\KPG6D\

If the software does not work properly, please see !NSTALLATION and proceed the installation again, or Call our Customer service.

- **Programming method**

1. Hold down the AUX and MONI keys on the TK-705D, turn the POWER switch on, and keep the keys down for two seconds. One beep is heard. When the MONI key is released, the LCD indicates the PC clone, and the IBM PC mode is entered.

LCD display

2. Transmit the data created by the IBM PC.
3. ⌐ is indicated on the display of the TK-705D/DN/DH. (If data is being transmitted from the TK-705D/DN/DH to the IBM PC, ⇗ is displayed.)
4. After the data transfer ends, the TK-705D/DN/DH is ready to receive data as in 2.

REALIGNMENT

User Use Mode

In this mode, the user uses the transceiver.

After writing all data, set the CN8 short connector to the USE side, and switch the power on to enter this mode.

1. Initial condition

CH : If the last channel number is backed up, that channel becomes ready to receive. If the last channel number is not backed up, channel 1 becomes ready to receive.
MONI : OFF
SQ OFF : OFF
SCAN : OFF
AUX : OFF
REC : OFF

2. Function

Encoder : Channel up/down
MONI : MONI ON/OFF (When this key is held down for two seconds, SQ is set to OFF.)
PTT : Transmit/receive
Microphone hook : Microphone hook function (This function works by setting.)
AUX : Option ON/OFF
REC : Option ON/OFF
SCAN : SCAN ON/OFF
D/A : Change between ADD and DELETE (This function works after the SCAN key is pressed. It works only when available in the specification setting mode.)

RAD Selection

There are two RAD selection modes: RA and RD. Either can be selected, according to your purpose.

1. Modes

RA : The audio signal, muted or unmuted by the busy signal (IC204 port 23: pin 37), is obtained. (Factory setting: RA)
If DRS is set with AUX, set the mode to RA. (If the mode is set to RD, noise is recorded, not muted, and so is played back.)
RD : The audio signal is always obtained whether there is a busy signal or not. If 2TONE or DTMF is set with AUX, set the mode to RD. (If the mode is set to RA, the voice signal may be muted if the radio signal is weak.)

If AUX is not set, or if talkaround is set, either RA or RD can be selected.

2. Switching between RA and RD

To set the RAD signal to RA or RD, reconnect the shorting plug (J4) of connector CN7 on the TX-RX unit (A/2). (It is factory-set to RA.)

TX-RX UNIT (A/2)
Component side view

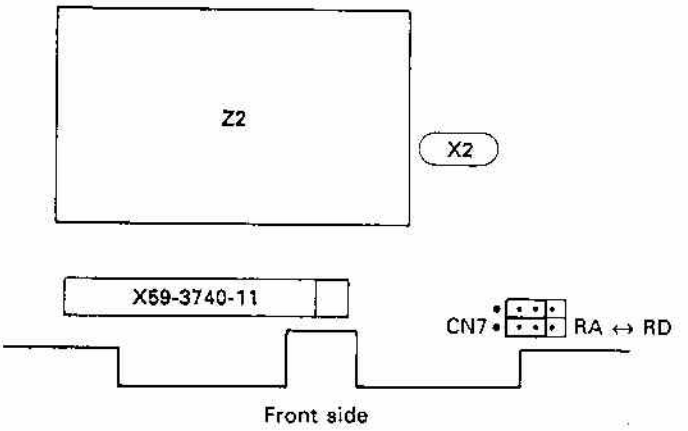

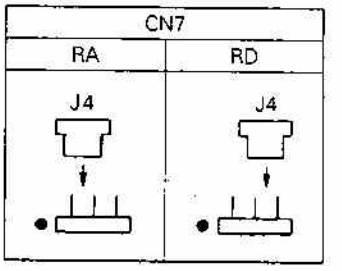

Note : Remove the plug (J4) from above.

REALIGNMENT

CN204 pin functions when AUX is set (DRS/2TONE/DTMF)

1. Digital recording system (DRS)

- When the REC key is pressed, the RA signal can be recorded, and CN204 pin 2 (PO1) goes high. CN204 pin 3 (PO2) goes high in synchronization with the busy signal, and recording starts and continues for about 32 seconds.
- When the AUX key is pressed, CN204 pin 2 (PO1) goes low, pin 3 (PO2) goes high, the recorded signal is output to RA, and playback starts.
- When the DRS is recording or playing back, CN204 pin 6 (PI2) goes low. When the operation ends, pin 6 goes high to indicate the state to the microprocessor. If the AUX key is pressed in the middle, PO3 goes high, and the operation stops.
- When recording starts, $\overline{ACL}$ goes low, and all is cleared to record data for 32 seconds from the beginning.

2. 2TONE

- When CN7 to is reconnected to RD, the receive signal for 2TONE decoding is supplied from CN204 pin 9 (RAD) regardless of whether there is a busy signal or not.
- The 2TONE decode latch is connected to CN204 pin 6 (PI2) so that it is low if the code matches and high if it does not.
- Horn alert is selected so that a high signal is output from CN204 pin 4 (PO3) when it is on, and a low signal is output when it is off, whenever the AUX key is pressed. This signal is used to control the decode momentary signal.
- The 2TONE reset signal is output from CN204 pin 10 (PO4). Normally, the same logic as hook is used: low when hook is on, and high when it is off. The reset signal changes from low to high, and back to low when the channels are switched with the encoder.
- The same logic as PTT (high: RX, low: TX) is output to CN204 pin 3 (PO2).

3. DTMF

- When CN7 is reconnected to RD, the receive signal for DTMF decoding is supplied from CN204 pin 9 (RAD) regardless of whether there is a busy signal or not.
- The DTMF decode latch is connected to CN204 pin 6 (PI2) so that it is low if the code matches, and high if it does not.
- Horn alert is selected so that a high signal is output from CN204 pin 4 (PO3) when it is on, and a low signal is output when it is off, whenever the AUX key is pressed. This signal is used to control the decode momentary signal and the relay.
- The DTMF reset signal is output from CN204 pin 10 (PO4). Normally, the same logic as hook is used: low when the hook is on, and high when it is off. The reset signal changes from low to high, and back to low when the channels are switched with the encoder.
- TRANSPOND PTT is connected to CN204 pin 1 (PI1). When this pin is low, transmission takes place (normally high). The TRANSPOND TONE signal is sent to CN2 pin 2 (ABTO: answer back tone).
- The ALERT TONE signal is sent to CN2 pin 4 (ALERT). The signal is sent to CN2 pin 5 (DBD) only when the DEADBEAT DISABLE function is used (normally high; low when transmission is inhibited).

4. CN204 pin functions

If AUX is set to DRS, 2TONE, or DTMF, the CN204 pin functions change as shown in Table.

IC204 port/pin	CN204 pin	Pin name	Option setting DRS	2TONE	DTMF
P81/20	1	PI1	(VCX) : Unused	NC : Unused	TPT : When transpond tone is transmitted (TX : "L", Normally : "H")
P93/22	2	PO1	P3 : For KVP-1 (Recording mode : "H", Playback mode : "L")	NC : Unused	NC : Unused
P92/24	3	PO2	P0 : For KVP-1 (Recording or playback starts : "H", Normally : "L")	PTT logic output (RX : "H", TX : "L")	("H" output) : Unused
P91/25	4	PO3	P1 : For KVP-1 (Recording or playback stops : "H", Normally : "L")	PHA : Horn alert switch (ON : "H", OFF : "L")	PHA : Horn alert switch (ON : "H", OFF : "L")
	5	8C	(8C) : Unused	8C	8C
P80/21	6	PI2	EOS : For KVP-1 (During recording/playback : "L" Wait for recording or playback : "H")	DL : Decode latch (Match : "L", No match : "H")	DL : Decode latch (Match : "L", No match : "H")
	7	5C	5C	(5C) : Unused	(5C) : Unused
	8	E	GND	GND	GND
	9	RAD	RA : (Reconnect CN7)	RD : (Reconnect CN7)	RD : (Reconnect CN7)
P90/25	10	PO4	ACL : For KVP-1 reset output (Normally : "H", Reset : "L")	Reset : Output with the same logic as hook. (Hook ON : "L", OFF : "H")	Reset : Output with the same logic as hook. (Hook ON : "L", OFF : "H")

DISASSEMBLY FOR REPAIR

Removing the Front Panel

1. Remove the four screws holding the upper and lower cases (❶).

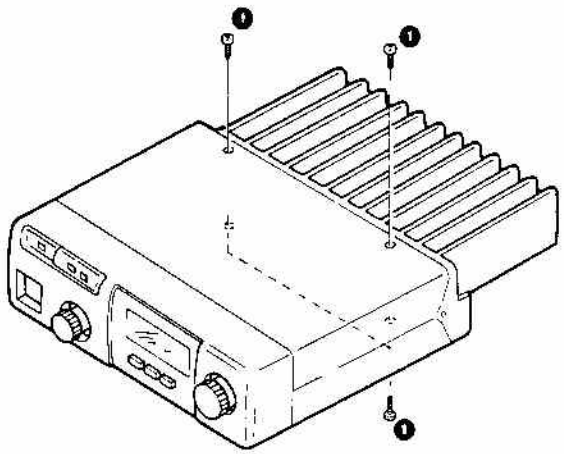

2. Pull out the CHANNEL selector knob (❷) and volume control knob (❸).
3. Slightly lift the stoppers holding the top and bottom of the front panel and pull out the front panel (❹).
4. Remove the cushions (❺, ❻).

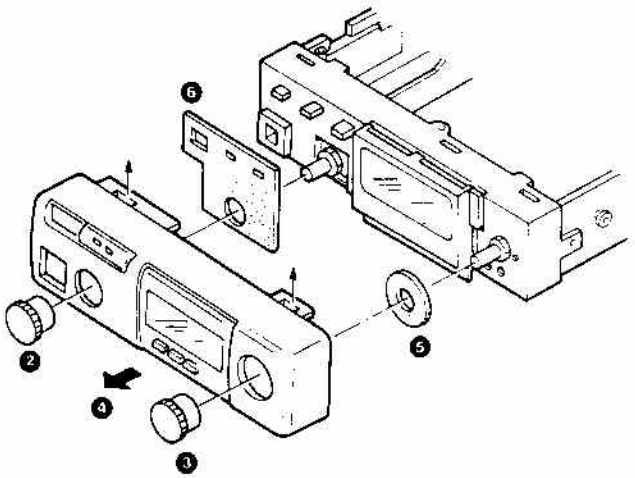

5. Remove the four screws on the sub-panel (❼).
6. Pull the display section forward (❽).
7. Remove the hexagonal nuts of the CHANNEL selector and volume controls (❾).
8. Pull the sub-panel forward (❿).
9. Remove the two screws holding the TX-RX unit (B/2), and remove the unit (⓫).

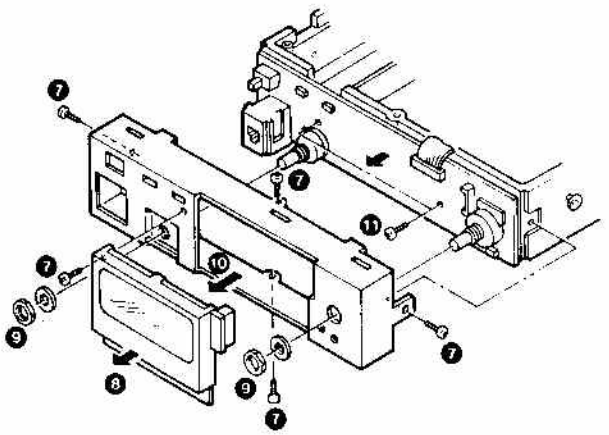

Receiver Section

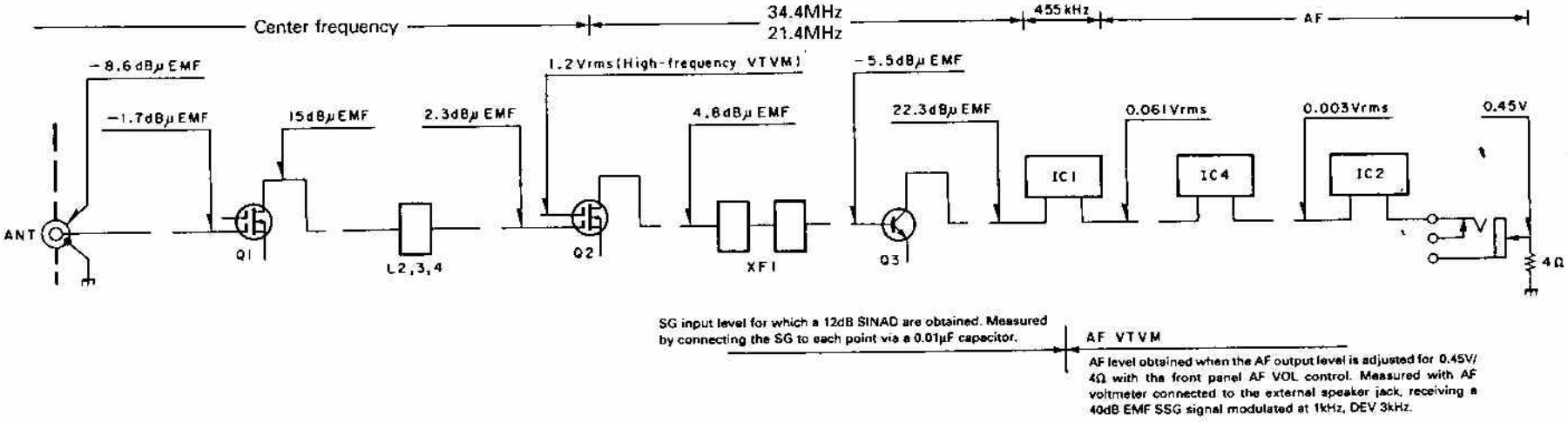

Transmitter section

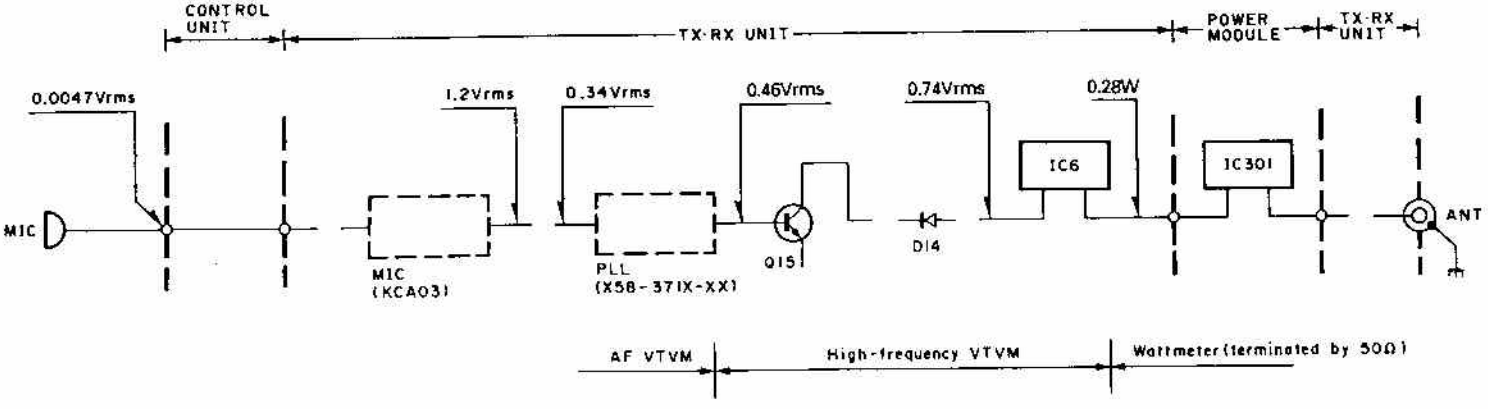

1. AG is set so that MIC input becomes 3kHz DEV at 1kHz MOD.
2. Transmitting frequency : Center frequency

BLOCK D

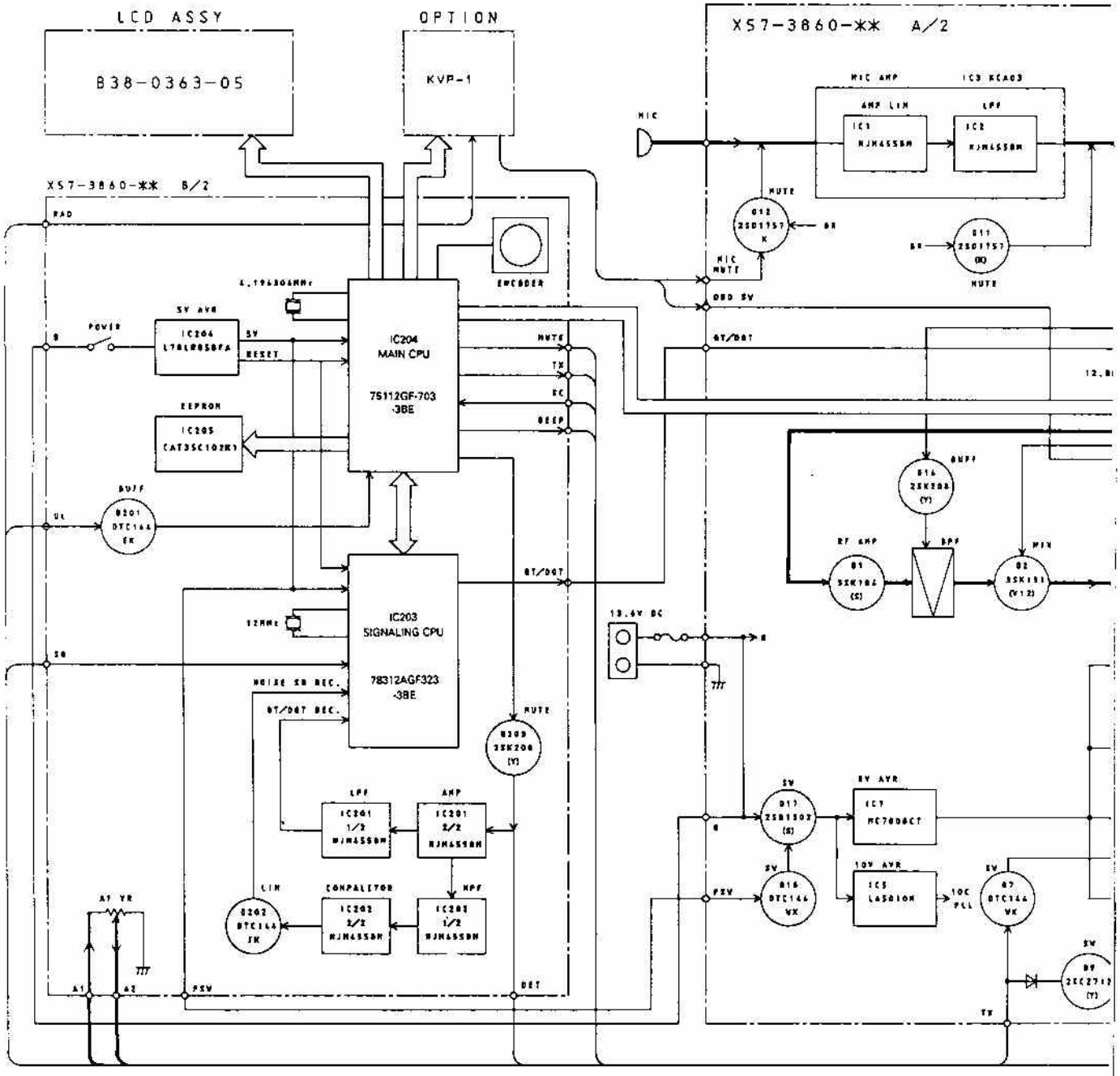
LCD ASSY
B38-0363-05
OPTION
KVP-1
X57-3860-** A/2
X57-3860-** B/2
IC204
MAIN CPU
75112GF-703
-3BE
IC203
SIGNALING CPU
78312AGF323
-3BE
EEPROM
IC205
CAT35C102K1
ENCODER
MIC AMP
AMP LIN
LPF
MIC
MUTE
RF AMP
BPF
MIX
LPF
AMP
COMPALITOR
HPF
LIN
PSW
DET
A1
A2
A7 VR
RAD
POWER
SV AVR
RESET
BUFF
UL
SB
NOISE SB DEC.
BT/DBT DEC.
BT/DBT
TX
RC
BEEP
13.6V DC
10V AVR
PLL

TK-705D/DN/DH

IAGRAM

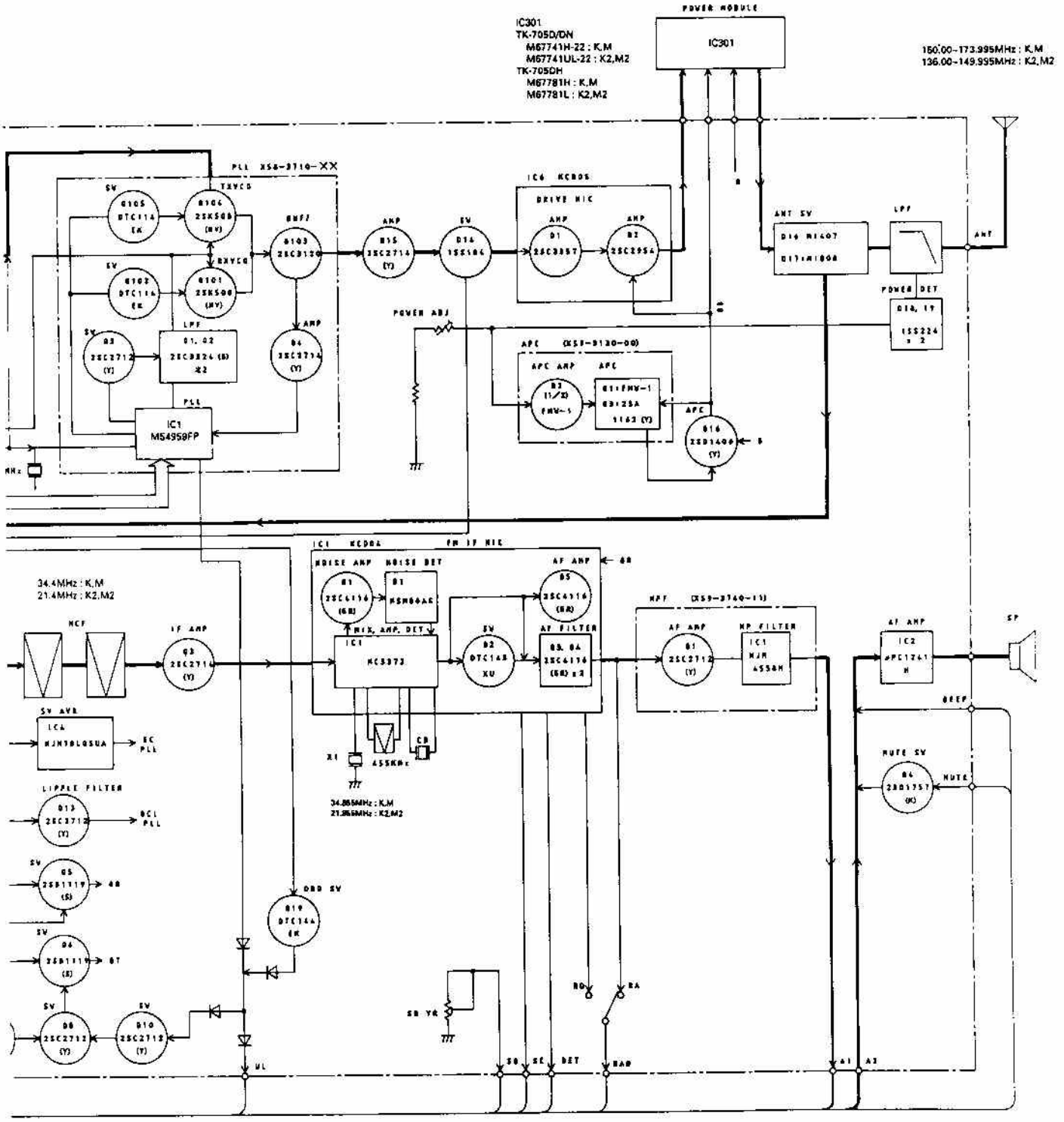

CIRCUIT DESCRIPTION

Type		TX-RX unit (X57-3860-XX)
TK-705D	K,M	-10
	K2,M2	-11
TK-705DH	K,M	-12
	K2,M2	-13
TK-705DN	M	-21

Table 1

Circuit Configuration By Frequency

The TK-705D/DN/DH incorporates a PLL synthesizer which uses a digital VFO to allow any channel step of 5 or 6.25kHz to be selected (See Figure 1).

The receiving system utilizes double-conversion techniques. That is, an incoming signal is mixed down to the 1st intermediate frequency (IF) of 34.4MHz (**K,M**), 21.4MHz (**K2,M2**), using a 1st local oscillator frequency of from 115.600 to 139.595MHz (**K,M**), 114.600 to 128.595MHz (**K2,M2**). The 1st IF signal is then mixed with the 2nd local oscillator frequency of 34.855MHz (**K,M**), 21.855MHz (**K2,M2**) to generate the 2nd IF of 455kHz.

The transmitting system consists of a PLL circuit which allows direct modulation and direct frequency division. Signals from the PLL circuit are amplified by a linear amplifier for transmission.

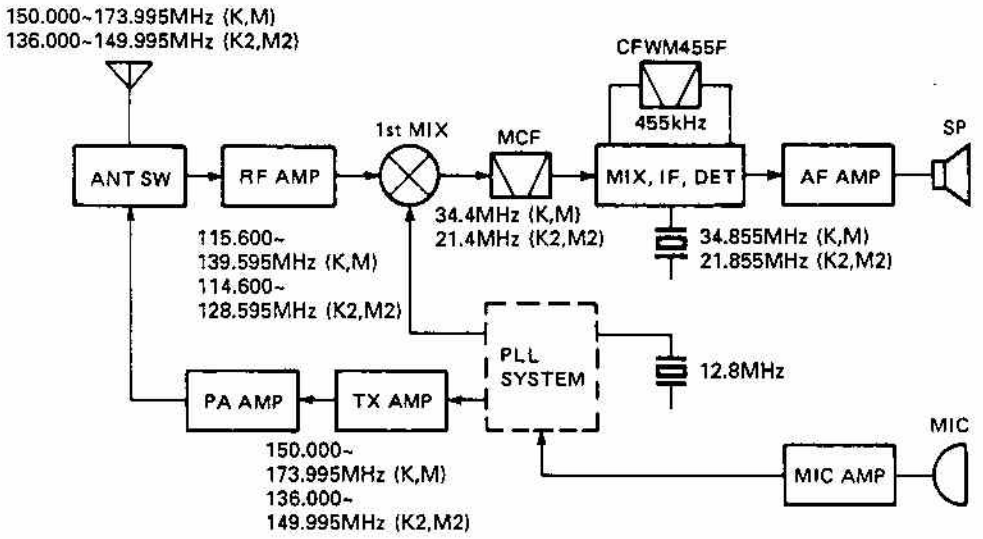

Fig. 1 Frequency configuration

CIRCUIT DESCRIPTION

Receiving System

• Overview

Incoming signals from the antenna pass through a low-pass filter in the final block of the transmitter system, and are switched to the front-end of the receiver system via a receive/transmit switching diode.

The signals are then passed through an antenna matching coil, where the high-frequency components are amplified by a GaAs FET. The signals are then fed into a four-stage bandpass filter that uses varactor diode tuning to reject unwanted signal components, and is fed to the 1st mixer. The 1st mixer uses the N-channel MOS FET that are used in the RF stage to obtain better two-signal characteristics. The 1st mixer mixes the signal with the 1st local oscillator frequency and converts it to the 1st IF (34.4/21.4MHz). The signal then passes through two monolithic crystal filters (MCFs) to remove unnecessary near-by frequency components. The signal from the MCFs is used as the 1st IF signal.

The 1st IF signal is amplified and fed into IC1 (KCD04) in the FM IF HIC. The IF signal is then mixed with the 2nd local oscillator frequency of 34.855/21.855MHz to generate the 2nd IF of 455kHz. The 455kHz signal is then passed through a six element ceramic filter (CFWM455), and fed back into IC1 for additional amplification. The output signal from the IC1 is then fed into a power amplifier via the audio volume control for application to the speaker.

Item	Rating
Nominal center frequency	34.4MHz
Pass bandwidth	±7.5kHz or more at 3dB
Attenuation bandwidth	±28kHz or less at 40dB
Ripple	1.5dB or less
Insertion loss	3dB or less
Guaranteed attenuation	60dB or more within ±1MHz (Spurious : 40dB or more)
Terminating impedance	800Ω/1.5pF

Table 2 MCF (L71-0298-05) (TX-RX unit XF1) : TK-705D/DH K,M

Item	Rating
Nominal center frequency	34.4MHz
Pass bandwidth	±3.75kHz or more at 3dB
Attenuation bandwidth	±14.0kHz or less at 40dB
Ripple	1.5dB or less
Insertion loss	3dB or less
Guaranteed attenuation	60dB or more within ±1MHz (Spurious : 40dB or more)
Terminating impedance	440Ω/4pF

Table 3 MCF (L71-0299-05) (TX-RX unit XF1) : TK-705DN M

Item	Rating
Nominal center frequency	21.4MHz
Pass bandwidth	±7.5kHz or more at 3dB
Attenuation bandwidth	±25kHz or less at 40dB
Ripple	1.0dB or less
Insertion loss	2.5dB or less
Guaranteed attenuation	85dB or more within ±1MHz (Spurious : 40dB or more)
Terminating impedance	1.6kΩ/1.0pF

Table 4 MCF (L71-0244-05) (TX-RX unit XF1) : TK-705D/DH K2,M2

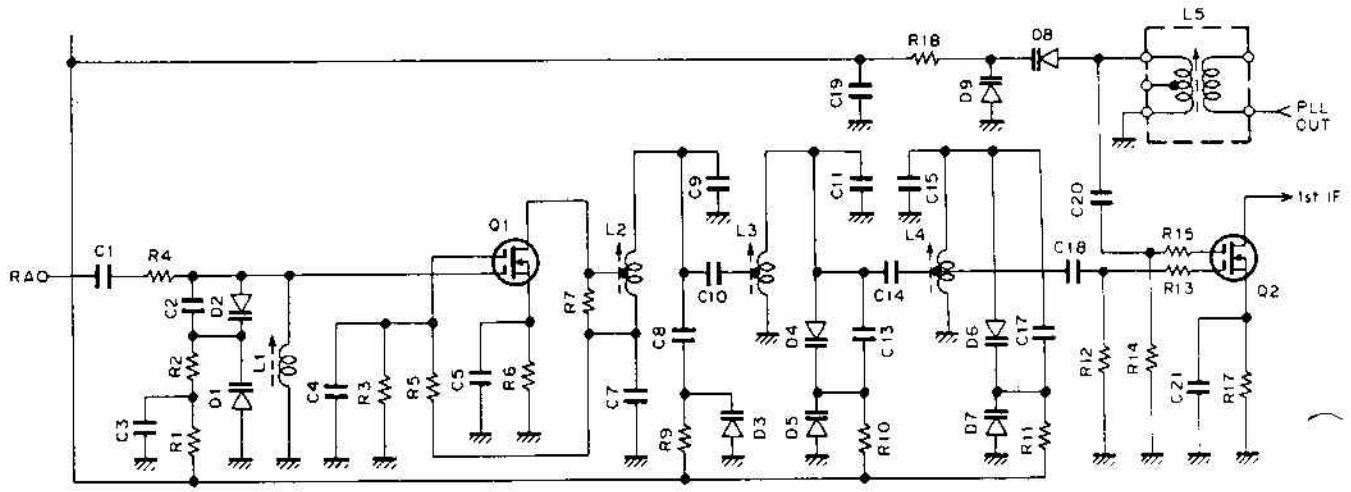

Fig. 2 Front-end section (varactor diode tuning)

CIRCUIT DESCRIPTION

Item	Rating
Nominal center frequency	455kHz ± 1kHz
6dB bandwidth	±6kHz or more (from 455kHz)
50dB bandwidth	±12.5kHz or less (from 455kHz)
Ripple (Within ±4kHz of 455kHz)	3dB or less
Insertion loss	6dB or less
Guaranteed attenuation (within ±100kHz of 455kHz)	35dB or more
I/O matching impedance	2.0kΩ

Table 5 Ceramic filter CFWM455F (L72-0372-05) (TX-RX unit CF1) : TK-705D/DH

Item	Rating
Nominal center frequency	455kHz
6dB bandwidth	±4.5kHz or more (from 455kHz)
50dB bandwidth	±10kHz or less (from 455kHz)
Ripple (Within ±3kHz of 455kHz)	2dB or less
Insertion loss	6dB or less
Guaranteed attenuation (within ±100kHz of 455kHz)	35dB or more
I/O matching impedance	2.0kΩ

Table 6 Ceramic filter CFWM455G (L72-0376-05) (TX-RX unit CF1) : TK-705DN

Transmitting System

• Overview

The transmitter produces the target frequency thru the use of direct FM-modulation via a varactor diode.

• Modulation circuit

Audio signals from the microphone are fed into the mic amplifier HIC IC3 (KCA03) for amplification into two operational amplifiers. The operational amplifiers form a splatter filter for pre-emphasis, amplification, limiting, and removal of unnecessary high-frequency components.

The FM modulation circuit directly FM-modulates the VCO signals, using a varactor diode.

• Pre-amplifier stage circuit

Signals from the VCO are applied to the drive HIC IC6 (KCB05). The amplifier always operates in a linear mode so that signals can be amplified without degradation. Additionally, the amplifier is designed to cover a wide range of frequencies and can produce stable output without adjustment. The APC (Automatic Power Control) controls collector voltage from the last stage of the pre-amplifier.

• Power amplifier circuit

The drive signal is amplified to the required level by the power module. The TK-705D/DN/DH uses a large heat sink for efficient heat dissipation.

• APC circuit

The APC circuit for automatic transmit output control detects part of the power module output, and amplifies it to provide a control voltage for output control. The output control voltage is in inverse proportion to the output from the power module, so it is maintained at the same level.

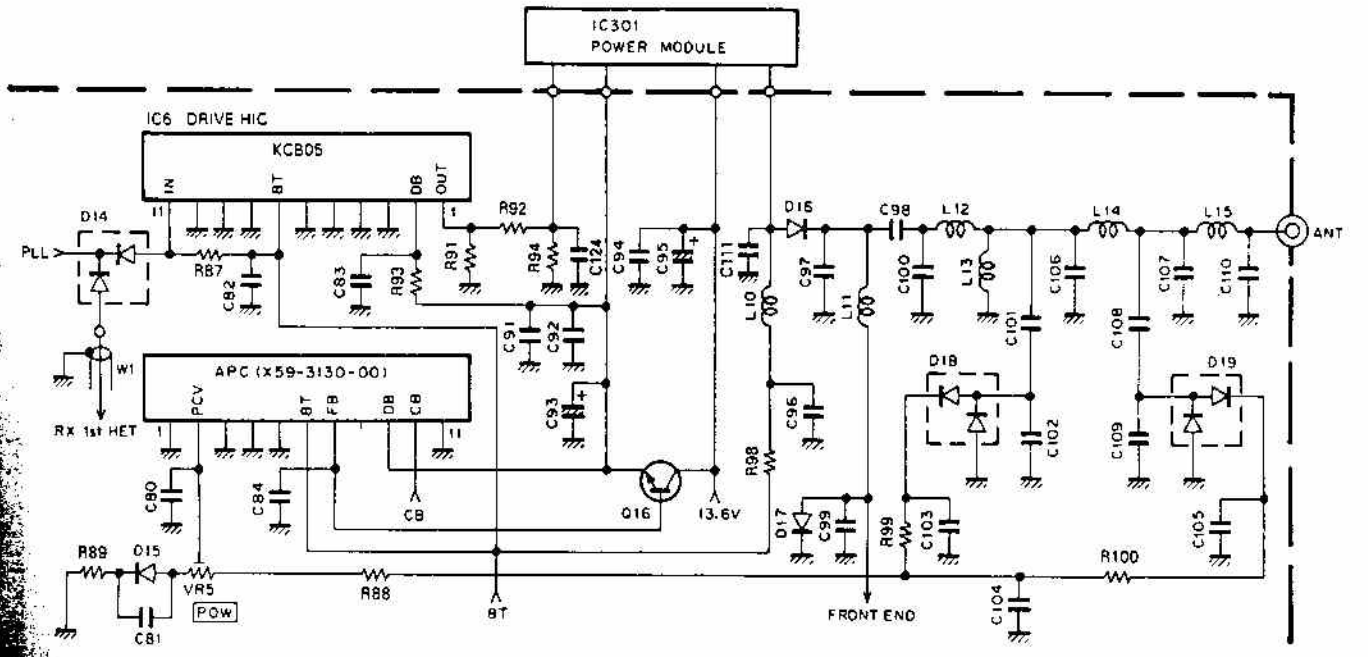

Fig. 3 Pre-amplifier stage, power amplifier, and APC circuits

CIRCUIT DESCRIPTION

PLL Synthesizer System

• Overview

Figure 4 is the PLL and VCO block diagram. In the TK-705D/DN/DH, the PLL system is implemented as a sub-unit which is divided into the upper VCO and lower PLL blocks. The sub-unit is shielded to prevent external interference.

There are two reference frequencies, 6.25kHz and 5kHz, available to allow 5 and 6.25kHz-step operation. The 6.25kHz is obtained by dividing the reference oscillator frequency of 12.8MHz by 2048, and the 5kHz is obtained by dividing it by 2560. The VCO directly generates the dial frequency. This dial frequency is amplified once and then fed into a pulse swallow-type PLL IC for frequency division and phase comparison, in order to lock the frequency.

The PLL system is locked between transmit mode and receive mode. By using a signal ("H" in transmit mode) from pin 11 of the PLL IC (M54959FP), the LPF is deactivated-activated by Q3 only for the moment when the TK-705D/DN/DH enters transmit mode. This helps produce lock more rapidly than previous methods.

In 150MHz mode, fvco (RX) is calculated by the following formula:

fvco = (150 − 34.4) = {(n x 128) + A} x fosc / R

where,

fvco : VCO output frequency
n : Binary value of the 10-bit programmable counter
A : Binary value of the 7-bit programmable counter
fosc : 12.8MHz reference frequency
R : Binary value of the 14-bit programmable counter
2560 (5kHz step mode)
2048 (6.25kHz step mode)

In 5kHz step mode,
n = 180 and A = 80.
Therefore, fvco is calculated as follows:

fvco = {(180 x 128) + 80} x 12800 / 2560
= {23040 + 80} x 5
= 115600= 115.600MHz

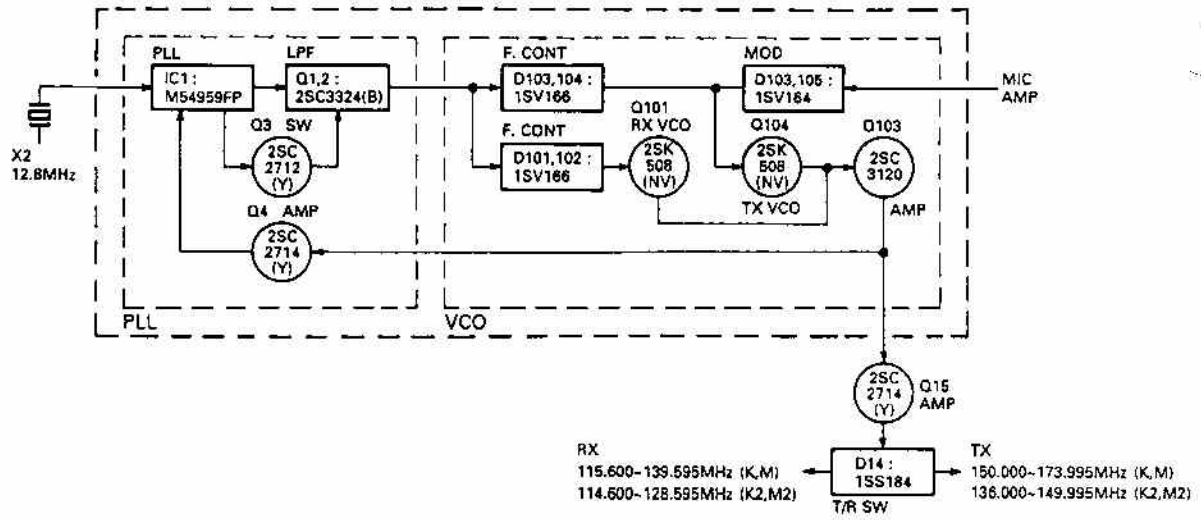

Fig. 4 PLL block diagram

CIRCUIT DESCRIPTION

• 8T (8V in transmit mode) and unlock circuits

In receive mode, the base of Q9 has 0.7V. As a result, Q9 is on, and Q8 and Q6 are off, and the collector of Q6 (8T) provides no voltage.

When the PTT switch is depressed. As a result, P21 of CPU (IC204) becomes "L", turning Q9 off, and Q8 and Q6 on. The 8T line is therefore supplied with 8V.

The unlock circuit operates only in transmit mode. Q10 is a PLL unlocking switching transistor. Usually, the base of Q10 is supplied with 0V ("L"), and the collector is supplied with 8V ("H").

When the PLL is unlocked, the base of Q10 is supplied with 0.7V, turning Q10 on. As a result, the collector of Q10 becomes "L" (0V). This turns Q8 off and the base of Q6 becomes 8V, turning it off. Therefore, when the PLL is unlocked, Q6 is off removing bias voltage from the 8T line. Without the 8T voltage no transmit signal is generated.

If the DBD (dead beat disable) function is used for DTMF control, a signal that is normally high (or open), going low during a DBD operation, is applied to CN2 DBD pin 5. This turns Q19 on, and Q10 is controlled by the PLL unlock signal only. Q19 turns off during a DBD operation, and Q10 turns on regardless of the PLL unlock signal. The collector of Q10 goes low, 8T is not output as described previously, and transmission is inhibited. If DBD is not used, do not connect it.

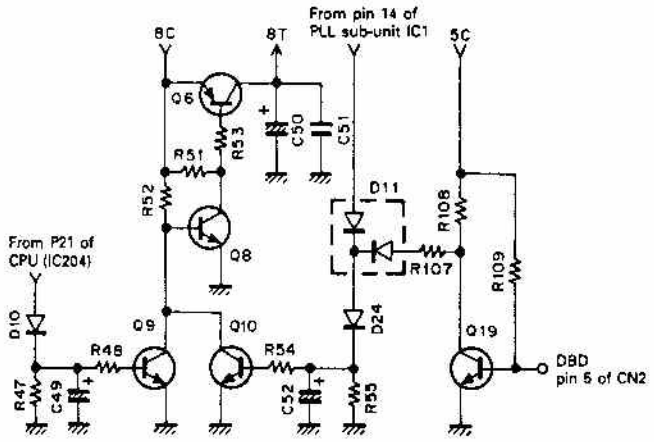

Fig. 5 8T and unlock circuits

Digital Control System

• Overview

The control system consists of a 8 bit micro-controller (IC203), a 4 bit micro-controller (IC204), a reset IC (IC206), and an Electronically Erasable Read Only Memory (EEROM) (IC205).

• Frequency programming of transmit and receive

Transmit and receive frequencies are programmed by using the channel selector and the PTT switch on the transceiver when an internal jumper is installed.

After the internal jumper is removed, the transceiver reverts to the user mode and the channel selector only selects those frequencies already programmed into the EEROM.

• Reset circuit

Micro-controller reset is enabled by RST (IC206).

At initial power on (if the voltage rises slowly), the RST of IC206 is detected by IC203, 204 and reset is initiated internally.

If 5C voltage exceeds 4.8V, the output RSTof IC206 becomes high, causing the micro-controller to go to the reset mode.

• Display circuit

The display circuit is contained in the LCD assembly. It consists of a LCD driver, its peripheral circuits, and an LCD. The LCD is dynamically operated at a 50% duty cycle. The LCD driver receives LCD data from P61, P72, and P73 of the CPU (IC204).

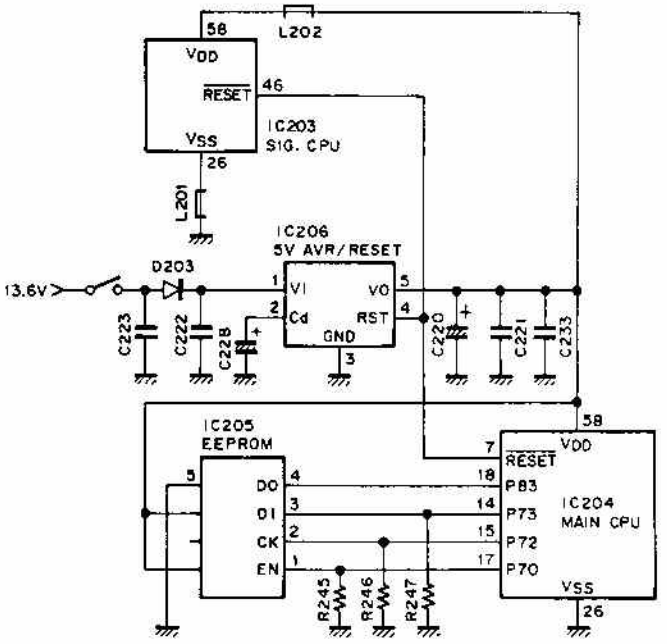

Fig. 6 Reset circuit

CIRCUIT DESCRIPTION

• PLL data output

PLL data is available from P72 (CK), P73 (DT), and P71 (EN) of the CPU (IC204). Figure 7 is a timing chart for PLL data transfer, and Figure 8 shows the format of PLL data.

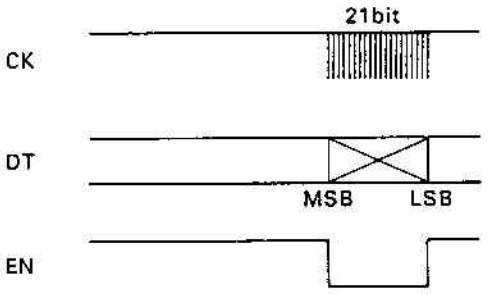

Fig. 7 Timing chart for PLL data transfer

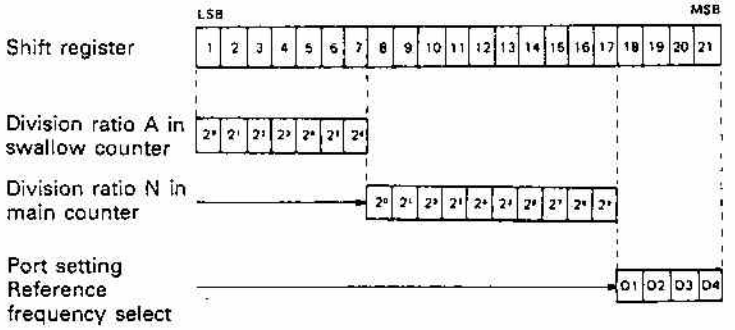

The 21-bit data is made up of the following:

1. Division ratio data A and N (17 bits)

F (display – 34.4MHz in RX mode)
= {(N x 128) + A} x 12.8MHz / ref
N : Division ratio set in 10-bit main counter (binary)
A : Division ratio set in 7-bit swallow counter (binary)

2. Reference frequency (ref) select (2 bits)

Data		Phase reference frequency	
D1	D2		
L	L	5kHz	5kHz step mode
H	L	6.25kHz	6.25kHz step mode

3. Switch select (2 bits)

Data		Output port		
D3	D4	SW1	SW2	
L	H	L	H	RX mode
H	L	H	L	TX mode

Fig. 8 PLL data format

• Signaling/squelch

The IC1 DET output is amplified by about 26 dB by the IC201 (2/2) amplifier, and divided into the QT/DQT signal and the SQ (noise squelch) signal. The QT/DQT signal is limited to 300Hz or less by the IC201 (1/2) low-pass filter, and sent to AN0 (pin 27) of the microprocessor (IC203) for signaling. The SQ signal is limited to 30kHz or more by the IC202 (1/2) high-pass filter, and rectified by the IC202 (2/2) comparator. A signal in the range 0 to 5V is produced by level shifter Q202, and sent to IC203 P30 (pin 20). The microprocessor checks whether the DQT/QT signaling matches. If it does, IC203 P14 $\overline{\text{DTSS}}$ (pin 7) outputs a low signal; otherwise, it outputs a high signal. If there is an SQ signal, IC203 P16 $\overline{\text{SSQ}}$ (pin 9) outputs a low signal; otherwise, it outputs a high signal.

D205 quickly stabilizes the potential on the positive side of C224 to the mid-point bias of IC201 (2/2) when the power is switched on or when transmission changes to reception. Q203 mutes only during scanning, so that signaling is detected correctly while the PLL is unlocked.

For transmission, the QT and DQT signals are output as PWM (pulse width modulation) signals from the output pin (P34, pin 33) of the digital-to-analog converter (IC203). They pass through a CR filter, and a modulation signal is sent to the TO pin.

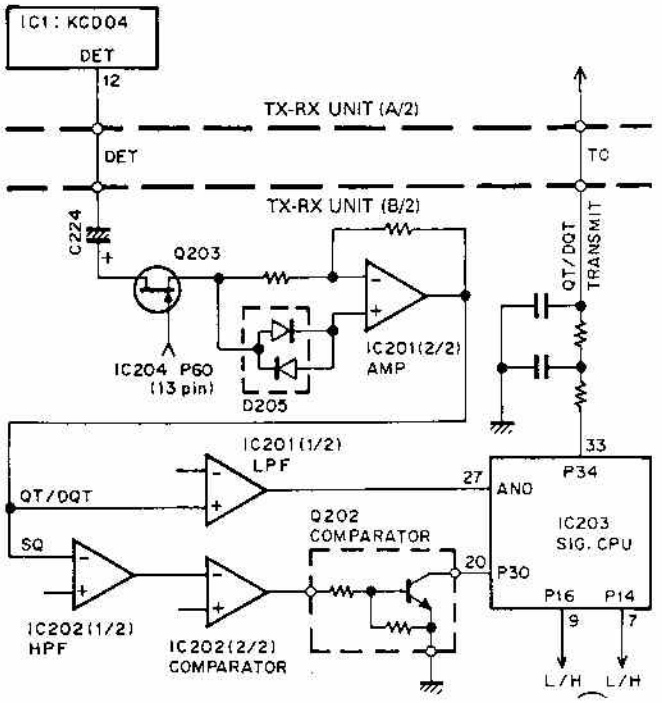

Fig. 9 Signaling/squelch

SEMICONDUCTOR DATA

Signaling CPU : 78312AGF323-3BE (IC203) Terminal Functions

Pin No.	Port No.	Port name	Pin name	I/O	Function
1,2	P06, P07			–	Unused, VDD connection.
3~5	P10~P12			–	Unused, VDD connection.
6	P13		DET25	O	Signaling rise (during scan). 0 : Present, 1 : Absent
7	P14		DETSS	O	Signaling match signal. 0 : Present, 1 : Absent
8	P15			–	Unused, open.
9	P16		SSQ	O	Squelch. 0 : Present, 1 : Absent
10	P17			O	Serial interface busy. 0 : Busy, 1 : OK
11	P20	NMI		–	Unused, GND connection.
12	P21	INTE0		–	Unused, GND connection.
13	P22	INTE1		–	Unused, GND connection.
14	P23	INTE2		–	Unused, GND connection.
15	P24	TXD		–	Unused, GND connection.
16	P25	RXD	TXD	I	Serial data.
17	P26	SCK		–	Unused, open.
18	P27	CTS	CTS	I	Serial clock.
19	RFSH			–	Unused, open.
20	P30	CI0		I	Squelch noise detection.
21	P31	CTRL0		–	Unused, open.
22	P32	CI1		–	Unused, open.
23	P33	CTRL1		–	Unused, open.
24	X1			I	12MHz crystal oscillator.
25	X2			I	12MHz crystal oscillator.
26	Vss			I	GND
27	AN0			I	Signaling signal input.
28	AN1			I	Squelch level setting.
29,30	AN2, AN3			–	Unused, open.
31	AVref			I	VDD connection.
32	AVss			I	GND connection.
33	P34	PWM0	TO	O	Signaling output.
34	P35	PWM1		–	Unused, open.
35	P36	CLR0/TO0		–	Unused, open.
36	P37	CLR1/TO1		–	Unused, open.
37~44	P50~P57	A8~A15		–	Unused, VDD connection.
45	EA			I	VDD connection.
46	RESET			I	Reset pulse input.
47	RD			–	Unused, open.
48	WR			–	Unused, open.
49	ALE			–	Unused, open.
50~57	P40~P47	AD0~AD7		–	Unused, VDD connection.
58	VDD			I	5V connection.
59~64	P00~P05			–	Unused, VDD connection.

Main CPU : 75112GF-703-3BE (IC204) Terminal Function

Pin No.	Port No.	Port name	Pin name	I/O	Function
1	P41			I	Unused, GND or VDD connection.
2	P40	PDETSS	DETSS	I	Signaling match/mismatch. 1 : Mismatch, 0 : Match
3	P53	PDET25	DET25	I	Signaling rise (during scan). 1 : Absent, 0 : Present
4	P52	PUL	LOCK	I	PLL unlock signal.
5	P51	PDQTNITX		I	Logic switching during DQT or transmission. 1 : Inverse, 0 : Normal
6	P50			I	Unused, VDD connection.
7	RESET			I	

SEMICONDUCTOR DATA

Pin No.	Port No.	Port name	Pin name	I/O	Function
8,9	X2, X1			I	4.19MHz crystal oscillator.
10	P63	PSUCOMSK		O	Clock for sub-microprocessor communication.
11	P62	PDQTNI		I	Logic switching during DQT or reception. 1 : Inverse, 0 : Normal
12	P61		CE	O	LCD CE.
13	P60			O	Scan detection mute control. 1 : Unmute, 0 : Mute
14	P73	PROMDI	DT	O	LCD, PLL, EEPROM, and sub-microprocessor data.
15	P72	PROMSK	CK	O	LCD, PLL, and EEPROM CK.
16	P71	PPLLEP	EN	O	PLL IC LE.
17	P70	PROMCS		O	EEPROM CS.
18	P83	PROMDO		I	EEPROM DO.
19	P82			I	
20	P81	POPTX		I	DTMF transpond tone transmission signal.
21	P80	POPDET/PEOS		I	2TONE, DTMF detection. 0 : Match, 1 : Mismatch/DRS EOS signal input. 0 : Stop, 1 : Operate
22	P93	PREC		O	Record/playback switching during DRS. 1 : Record, 0 : Playback
23	P92	PSTART/POPPTT		O	Start during DRS/PTTSW logic output during 2TONE.
24	P91	PRAY/PSTOP		O	Stop during DRS/2TONE, DTMF horn alert switch.
25	P90	POPRET/PACL		O	2TONE, DTMF reset.
26	Vss			I	GND.
27	INT3/P13			-	Unused, GND connection.
28,29	INT2/P12, INT1/P11			I	Encoder.
30	INT0/P10	PSET		I	Setting/use mode switching. 0 : Setting, 1 : Use
31~34	PTH03~PTH00			-	Unused, GND connection.
35	TI0	P2CH		-	2-/16-channel switching. Low : 16 channels
36	TI1		HOOK	I	IBM PC connection start bit interrupt input.
37	P23	PSMUTE		O	Voice sub mute.
38	PCL/P22	PMUTE		O	Voice mute.
39	PTO1/P21	PTXB		O	Transmission circuit switch. 1 : Reception, 0 : Transmission
40	PTO0/P20		BEEP	O	Beep.
41	SI/P03			-	Unused, VDD connection.
42	SO/P02	PPTTSW	PTT	I/O	PTT key input, IN/OUT in clone mode, data out when IBM PC is connected.
43	SCK/P01			-	Unused, open.
44	INT4/P00			-	Unused, VDD connection.
45	P123			I	Unused, VDD connection.
46	P122			-	Unused.
47	P121	PHOOK	HOOK	I/O	In when the microphone is hooked, data in when IBM PC is connected.
48	P120	PAUX1	AUX1	I	AUX key input.
49	P133	PMONI	MONI	I	MONI key input.
50	P132	PAUX2	REC	I	REC key input.
51	P131	PSCAN	SCAN	I	SCAN key input.
52	P130	PDA	D/A	I	D/A key input.
53~56	P143~P140			-	Unused.
57	NC			I	VDD.
58	VDD			I	5V.
59,60	P33, P32			I	IF setting.
61	P31	PSB1		I	
62	P30	PSB0		I	Step setting. 1 : 10-, 12.5kHz, 0 : 5-, 6.25kHz
63	P43	PSUCOMBS	BUSY	I	Communication busy signal. 1 : Enabled, 0 : Disabled
64	P42	PSSQ	SSQ	I	Slow squelch signal. 1 : Present, 0 : Absent

DESCRIPTION OF COMPONENTS

TX-RX UNIT (X57-3860-XX)

Component	Use/Functuin	Operation/Condition/Compatibilitiy
IC1	2nd local oscillator, IF amplification, detection, low-frequency amplification, noise amplification, noise detection, squelch switching	1 : 1st IF signal input. 3,4 : 2nd local oscillator. 9 : Busy input. 11 : S-meter output. 12 : DET output. 14 : RD output. 15 : Low-frequency output.
IC2	AF amplification	1 : AF input. 8 : AF output.
IC3	Mic amplification	1 : Mic input. 2 : Mic output.
IC4	5V AVR	
IC5	10V AVR	For PLL.
IC6	Transmit drive	
IC7	8V AVR	
IC201	Amplifier, LPF	
IC202	HPF, comparator	
IC203	Microprocessor	Signaling.
IC204	Microprocessor	Main control.
IC205	EEPROM	
IC206	5V AVR	
Q1	High-frequency amplification	Operates in receive mode.
Q2	1st mixer	
Q3	1st IF amplifier	
Q4	AF mute	
Q5	8R switching	ON in receive mode.
Q6	8T switching	ON in transmit mode.
Q7	8R switching control	ON in receive mode.
Q8	8T switching control	ON in transmit mode.
Q9	8T switching control	OFF in transmit mode.
Q10	8T switching control	OFF when PLL locked.
Q11	Mic line mute	ON in receive mode.
Q12	Mic mute	On when DTMF power output and receive mode.
Q13	PLL 8V ripple filter	
Q14	CV line buffer	
Q15	VCO output amplification	
Q16	TX drive stage +B control	
Q17	DC switch	
Q18	DC switch control	ON when power switch is ON.
Q19	8T switch control	For DTMF DBD switch.
Q201	UL line buffer	
Q202	Limiter	
Q203	DET line mute switch	OFF when SCAN UL, normally ON.
D1~7	BPF tuning	
D8, 9	HET tuning	
D10, 11	Switch	
D12	12.8MHz tuning	
D13, 14	Switch	
D15	Temperature compensation	
D16, 17	Transmit/receive switching	
D18, 19	Power detection	For APC.
D20	Reverse power protection	
D21	Switch	
D22	T/R switch	
D23	Surge absorber	
D24	Switch	
D202	CPU protection	
D203	Reverse current prevention	
D205	Limiter	

PARTS LIST

* New Parts
Parts without Parts No. are not supplied.
Les articles non mentionnes dans le Parts No. ne sont pas fournis.
Teile ohne Parts No. werden nicht geliefert.

TK-705D/DN/DH

Ref. No. 参照番号	Address 位置	New Parts 新	Parts No. 部品番号	Description 部品名／規格	Destination 仕向	Remarks 備考
			TK-705D/DN/DH			
1	1B		A01-1065-03	METALLIC CABINET(UPPER)		
2	2B		A01-1066-03	METALLIC CABINET(LOWER)		
3	1C		A10-1292-01	CHASSIS CALKED ASSY		
4	2B		A22-0765-23	SUB PANEL		
5	2A		A62-0093-03	PANEL ASSY		
-			B38-0322-05	DISPLAY ASSY(LED)		
-			B42-3394-14	LABEL(FCC)	KK2	
7	2A		B03-0563-04	DRESSING PLATE		
8	2A		B10-1126-04	FRONT GLASS		
9	2B		B38-0363-05	DISPLAY ASSY(LCD)		
11	1B,1C		B42-2455-04	LABEL(M4X8MAX)		
12	1C		B42-3343-04	LABEL(S/NO.)		
13	1E		B46-0409-30	WARRANTY CARD	KK2	
14	1E		B62-0129-20	INSTRUCTION MANUAL		
15	1C		B72-0216-14	MODEL NAME PLATE	K	D
15	1C	*	B72-0221-14	MODEL NAME PLATE	K2	D
15	1C	*	B72-0222-04	MODEL NAME PLATE	MM2	D
15	1C	*	B72-0222-04	MODEL NAME PLATE	M	N
15	1C	*	B72-0430-04	MODEL NAME PLATE	KM	H
15	1C		B72-0469-04	MODEL NAME PLATE	K2	H
15	1C		B72-0470-04	MODEL NAME PLATE	M2	H
-			E31-3197-15	CONNECTING WIRE(SP)		
-			E40-9016-05	PIN ASSY SOCKET		
16	1E		E30-2036-05	GND WIRE(MIC)		
17	1E		E30-2076-15	DC CORD ASSY		
18	1C		E30-2145-05	ANT CABLE		
19	1C		E30-2172-15	DC CORD		
20	1C,2D		F51-0016-05	FUSE (10A)	KK2MM2	D
20	1C,2D		F51-0016-05	FUSE (10A)	M	N
20	1C,2D		F51-0017-05	FUSE (15A)	KK2MM2	H
-			G13-0959-04	CUSHION (MIC)	KK2	
21	1B		G02-0576-14	FLAT SPRING		
23	2A		G09-0405-05	KNOB FIXED SPRING		
24	1B		G10-0651-04	NON-WOVEN FABRIC (SP)		
25	1B,2C		G10-0681-04	NON-WOVEN FABRIC		
26	1B,2B		G10-0686-04	NON-WOVEN FABRIC (CABINET)		
27	1B		G13-0688-04	CUSHION (DC CORD)		
28	2B		G13-0935-04	CUSHION (VOL.)		
29	2A		G13-0936-04	CUSHION (POWER,MONI,AUX)		
30	2B		G13-0937-04	CUSHION (CH)		
31	2B		G13-0953-14	CUSHION (REC,SCAN,D/A)		
33	3D		H10-2677-02	POLYSTYRENE FOAMED FIXTURE		
34	1D		H11-0830-04	POLYSTYRENE PLATE		
35	2D		H13-0814-04	POLYSTYRENE BOARD		
36	1E		H25-0103-04	PROTECTION BAG (DC CORD)		
37	1D		H25-0720-04	PROTECTION BAG (RADIO)		
38	3E		H52-0146-04	ITEM CARTON BOX		
-			J21-4282-08	MOUNTING HARDWARE		
40	2D		J19-1376-15	MIC HANGER		
41	1C		J19-1434-04	HOLDER (SP)		

L:Scandinavia K:USA P:Canada
Y:PX(Far East, Hawaii) T:England E:Europe
Y:AAFES(Europe) X:Australia M:Other Areas

D : TK-705D K,K2,M,M2
N : TK-705DN M
H : TK-705DH K,K2,M,M2

⚠ indicates safety critical components.

PARTS LIST

× New Parts
Parts without Parts No. are not supplied.
Les articles non mentionnés dans le Parts No. ne sont pas fournis.
Teile ohne Parts No. werden nicht geliefert.

TK-705D/DN/DH
TX-RX UNIT (X57-3860-XX)

Ref. No. 参照番号	Address 位置	New Parts 新	Parts No. 部品番号	Description 部品名／規格			Destination 仕向	Remarks 備考
43	2D		J29-0441-03	MOUNTING BRACKET				
45	2B		K27-3052-04	KNOB(POWER)				
46	2A		K29-4533-04	KNOB(CH)				
47	2A		K29-4534-04	KNOB(VOL)				
48	2B		K29-4535-04	KNOB(MONI,AUX)				
A	2B		N09-0626-04	SCREW (M3X10)				
B	2B		N38-2640-46	SCREW (SUB PANEL)				
C	1C,2C		N33-2606-45	SCREW (CABINET)				
D	2B,1C		N87-2606-46	BRAZIER HEAD TAPTITE SCREW(PCB				
E	2B		N88-2606-46	FLAT HEAD TAPTITE SCREW				
50	2E		N99-0321-05	SCREW SET				
52	1B		T07-0246-05	LOUDSPEAKER(FULLRANGE)				
53	2E		T91-0362-15	MICROPHONE			KK2	
53	2E		T91-0509-05	MICROPHONE			MM2	
			LC7582	IC(LCD DRIVER))				
IC301			M57741UL-22	IC(POWER MODULE/ 138-174MHZ)			K2M2	D
IC301			M67741H-22	IC(POWER MODULE/ 150-174MHZ)			KM	D
IC301			M67741H-22	IC(POWER MODULE/ 150-174MHZ)			M	N
IC301			M67781H	IC(POWER MODULE/ 150-174MHZ)			KM	H
IC301			M67781L	IC(POWER MODULE/ 136-150MHZ)			K2M2	H
55	1B,2C		X57-3860-10	TX･RX UNIT			KM	D
55	1B,2C		X57-3860-11	TX･RX UNIT			K2M2	D
55	1B,2C	*	X57-3860-12	TX･RX UNIT			KM	H
55	1B,2C	*	X57-3860-13	TX･RX UNIT			K2M2	H
55	1B,2C	*	X57-3860-21	TX･RX UNIT			M	N
TX-RX UNIT (X57-3860-XX) -10 : D (K,M) -11 : D (K2,M2) -12 : DH (K,M) -13 : DH (K2,M2) -21 : DN (M)								
C1			CC73FCH1H030C	CHIP C	3PF	C	KM	
C1			CC73FCH1H040C	CHIP C	4PF	C	K2M2	
C2			CC73FCH1H220J	CHIP C	22PF	J	K2M2	
C3			CK73FB1E103K	CHIP C	0.01UF	K		
C4 ,5			CK73FB1H102K	CHIP C	1000PF	K		
C6			CK73FB1E103K	CHIP C	0.01UF	K		
C7			CK73FB1H102K	CHIP C	1000PF	K		
C8			CC73FCH1H220J	CHIP C	22PF	J	K2M2	
C8			CC73FCH1H330J	CHIP C	33PF	J	KM	
C9			CC73FCH1H040C	CHIP C	4PF	C	K2M2	
C10			CC73FCH1H0R5C	CHIP C	0.5PF	C		
C11			CC73FCH1H030C	CHIP C	3PF	C	KM	
C11			CC73FCH1H040C	CHIP C	4PF	C	K2M2	
C12			CK73FB1E103K	CHIP C	0.01UF	K		
C13			CC73FCH1H220J	CHIP C	22PF	J	K2M2	
C14			CC73FCH1H0R5C	CHIP C	0.5PF	C		
C15			CC73FCH1H0R5C	CHIP C	0.5PF	C	KM	
C15			CC73FCH1H020C	CHIP C	2.0PF	C	K2M2	
C16			CK73FB1H102K	CHIP C	1000PF	K		
C17			CC73FCH1H220J	CHIP C	22PF	J	K2M2	
C18			CC73FCH1H150J	CHIP C	15PF	J		
C19			CK73FB1E103K	CHIP C	0.01UF	K		
C20			CC73FCH1H030C	CHIP C	3PF	C		
C21 ,22			CK73FB1H102K	CHIP C	1000PF	K		
C23			CK73FB1E103K	CHIP C	0.01UF	K		
C24			CC73FCH1H070D	CHIP C	7PF	D	K2M2	

L:Scandinavia K:USA P:Canada
Y:PX(Far East, Hawaii) T:England E:Europe
Y:AAFES(Europe) X:Australia M:Other Areas

D : TK-705D K,K2,M,M2
N : TK-705DN M
H : TK-705DH K,K2,M,M2

⚠ indicates safety critical components.

PARTS LIST

* New Parts
Parts without Parts No. are not supplied.
Les articles non mentionnes dans le Parts No. ne sont pas fournis.
Teile ohne Parts No. werden nicht geliefert.

TX-RX UNIT (X57-3860-XX)

Ref. No. 参照番号	Address 位置	New Parts 新	Parts No. 部品番号	Description 部品名／規格			Destination 仕向	Remarks 備考
C24			CC73FCH1H090D	CHIP C	9PF	D	KM	D
C24			CC73FCH1H090D	CHIP C	9PF	D	KM	H
C24			CC73FCH1H220J	CHIP C	22PF	J	M	N
C25			CE04EW1A470M	ELECTRO	47UF	10WV		
C26			CK73FB1E103K	CHIP C	0.01UF	K		
C27 ,28			CK73FB1H102K	CHIP C	1000PF	K		
C29			CC73FCH1H330J	CHIP C	33PF	J	K2M2	
C29			CC73FCH1H470J	CHIP C	47PF	J	KM	
C30			CC73FCH1H390J	CHIP C	39PF	J	KM	
C31			CC73FCH1H820J	CHIP C	82PF	J	K2M2	
C31			CK73FB1H102K	CHIP C	1000PF	K	KM	
C33			CK73FF1C105Z	CHIP C	1.0UF	Z		
C34 ,35			CK73FB1E104K	CHIP C	0.10UF	K		
C36			CE04EW1A471M	ELECTRO	470UF	10WV		
C37			CK73FB1E103K	CHIP C	0.01UF	K		
C38			CE04EW1C470M	ELECTRO	47UF	16WV		
C39			CE04EW1A470M	ELECTRO	47UF	10WV		
C40 ,41			CE04EW1A470M	ELECTRO	47UF	10WV		
C42			CK73FB1E153K	CHIP C	0.015UF	K		
C43			CC73FSL1H101J	CHIP C	100PF	J		
C45 /46			CK73FF1C105Z	CHIP C	1.0UF	Z		
C47			CK73FB1E103K	CHIP C	0.01UF	K		
C48			CE04EW1A470M	ELECTRO	47UF	10WV		
C49			C92-0504-05	CHIP TAN	0.68UF	20WV		
C50			CE04EW1C100M	ELECTRO	10UF	16WV		
C51			CK73FB1E103K	CHIP C	0.01UF	K		
C52			C92-0504-05	CHIP TAN	0.68UF	20WV		
C53 ,54			CK73FB1H102K	CHIP C	1000PF	K		
C55			CK73FB1H471K	CHIP C	470PF	K		
C56			CC73FSL1H101J	CHIP C	100PF	J		
C57			CK73FB1E103K	CHIP C	0.01UF	K		
C58			CC73FUJ1H180J	CHIP C	18PF	J		
C59			CC73FUJ1H150J	CHIP C	15PF	J		
C61			C92-0507-05	CHIP TAN	4.7UF	6.3WV		
C62			CK73FB1E103K	CHIP C	0.01UF	K		
C63 -66			CK73FB1H102K	CHIP C	1000PF	K		
C67			CK73FB1E103K	CHIP C	0.01UF	K		
C68			CE04EW1A470M	ELECTRO	47UF	10WV		
C69			CK73FB1E103K	CHIP C	0.01UF	K		
C70 ,71			CE04EW1A221M	ELECTRO	220UF	10WV		
C72			CK73FB1E103K	CHIP C	0.01UF	K		
C73 ,74			CK73FB1H102K	CHIP C	1000PF	K		
C75			CC73FCH1H220J	CHIP C	22PF	J		
C76			CK73FB1H102K	CHIP C	1000PF	K		
C77			CC73FCH1H220J	CHIP C	22PF	J		
C78			CE04EW1C471M	ELECTRO	470UF	16WV		
C79			CK73FB1E103K	CHIP C	0.01UF	K		
C80 -82			CK73FB1H102K	CHIP C	1000PF	K		
C83			CK73FF1C105Z	CHIP C	1.0UF	Z		
C84			CK73FB1H102K	CHIP C	1000PF	K		
C85			CK73FB1E103K	CHIP C	0.01UF	K		
C86			CE04EW1A470M	ELECTRO	47UF	10WV		
C87			CK73FB1H102K	CHIP C	1000PF	K		
C88 ,89			CK73FB1E103K	CHIP C	0.01UF	K		
C90			CE04EW1C102M	ELECTRO	1000UF	16WV		

L:Scandinavia K:USA P:Canada
Y:PX(Far East, Hawaii) T:England E:Europe
Y:AAFES(Europe) X:Australia M:Other Areas

D : TK-705D K,K2,M,M2
N : TK-705DN M
H : TK-705DH K,K2,M,M2

⚠ indicates safety critical components.

PARTS LIST

* New Parts
Parts without Parts No. are not supplied.
Les articles non mentionnes dans le Parts No. ne sont pas fournis.
Teile ohne Parts No. werden nicht geliefert.

TX-RX UNIT (X57-3860-XX)

Ref. No. 参照番号	Address 位置	New Parts 新	Parts No. 部品番号	Description 部品名／規格			Destination 仕向	Remarks 備考
C91			CK73FB1H102K	CHIP C	1000PF	K		
C92			CK73FF1C105Z	CHIP C	1.0UF	Z		
C93			CE04EW1C470M	ELECTRO	47UF	16WV		
C94			CK73FB1H102K	CHIP C	1000PF	K		
C95			CE04EW1C100M	ELECTRO	10UF	16WV		
C96			CK73FB1H102K	CHIP C	1000PF	K		
C97			CC45SL2H120J	CERAMIC	12PF	J	KM	D
C97			CC45SL2H120J	CERAMIC	12PF	J	M	N
C97			CC45SL2H150J	CERAMIC	15PF	J	KM	H
C97			CC45SL2H180J	CERAMIC	18PF	J	K2M2	
C98			CK45B2H102K	CERAMIC	1000PF	K		
C99			CC73FCH1H090D	CHIP C	9PF	D	KM	
C99			CC73FCH1H220J	CHIP C	22PF	J	K2M2	
C100			CM73F2H220J	CHIP C	22PF	J		
C101			CC73FCH1H0R5C	CHIP C	0.5PF	C		
C102			CC73FCH1H020C	CHIP C	2.0PF	C	K2M2	
C102			CC73FCH1H020C	CHIP C	2.0PF	C	KM	
C103-105			CK73FB1H102K	CHIP C	1000PF	K		
C106,107			CC45SL2H390J	CERAMIC	39PF	J	KM	
C106,107			CC45SL2H470J	CERAMIC	47PF	J	K2M2	
C108			CC73FCH1H0R5C	CHIP C	0.5PF	C		
C109			CC73FCH1H020C	CHIP C	2.0PF	C	KM	D
C109			CC73FCH1H020C	CHIP C	2.0PF	C	MM	N
C109			CC73FCH1H040C	CHIP C	4PF	C	KM	H
C109			CC73FCH1H040C	CHIP C	4PF	C	K2M2	
C110			CC45SL2H150J	CERAMIC	15PF	J	KM	D
C110			CC45SL2H150J	CERAMIC	15PF	J	M	N
C110			CC45SL2H220J	CERAMIC	22PF	J	K2M2	
C110			CC45SL2H220J	CERAMIC	22PF	J	KM	H
C111			CM73F2H150J	CHIP C	15PF	J	K2M2	H
C112			CK73FB1H102K	CHIP C	1000PF	K		
C113			CK73FB1E223K	CHIP C	0.022UF	K		
C115			CC73FCH1H020C	CHIP C	2.0PF	C	K2M2	
C116			CK73FB1E103K	CHIP C	0.01UF	K		
C117			C92-0507-05	CHIP TAN	4.7UF	6.3WV		
C118			CK73FB1H102K	CHIP C	1000PF	K		
C119			CK73FB1E103K	CHIP C	0.01UF	K		
C120			CK73FB1E104K	CHIP C	0.10UF	K		
C121			C92-0003-05	CHIP TAN	0.47UF	25WV		
C123			CK73FB1E153K	CHIP C	0.015UF	K		
C124			CC73FCH1H080D	CHIP C	8PF	D	K2M2	H
C124			CC73FCH1H100D	CHIP C	10PF	D	KM	H
C201			CC73FSL1H101J	CHIP C	100PF	J		
C202			CK73FB1E273K	CHIP C	0.027UF	K		
C203			C92-0507-05	CHIP TAN	4.7UF	6.3WV		
C204,205			CK73FB1E273K	CHIP C	0.027UF	K		
C206,207			CC73FSL1H101J	CHIP C	100PF	J		
C208			CC73FCH1H180J	CHIP C	18PF	J		
C209,210			CK73FB1H102K	CHIP C	1000PF	K		
C211			CK73FB1H472K	CHIP C	4700PF	K		
C212			C92-0507-05	CHIP TAN	4.7UF	6.3WV		
C213,214			CC73FCH1H100D	CHIP C	10PF	D		
C215,216			CK73FB1E104K	CHIP C	0.10UF	K		
C217			CK73FB1H102K	CHIP C	1000PF	K		
C218,219			CC73FCH1H330J	CHIP C	33PF	J		

L:Scandinavia K:USA P:Canada
Y:PX(Far East, Hawaii) T:England E:Europe
Y:AAFES(Europe) X:Australia M:Other Areas

D : TK-705D K,K2,M,M2
N : TK-705DN M
H : TK-705DH K,K2,M,M2

⚠ indicates safety critical components.

PARTS LIST

* New Parts
Parts without Parts No. are not supplied.
Les articles non mentionnes dans le Parts No. ne sont pas fournis.
Teile ohne Parts No. werden nicht geliefert.

TX-RX UNIT (X57-3860-XX)

Ref. No. 参照番号	Address 位置	New Parts 新	Parts No. 部品番号	Description 部品名／規格	Destination 仕向	Remarks 備考
C220			CE04NW1C470M	ELECTRO 47UF 16WV		
C221-223			CK73FB1H102K	CHIP C 1000PF K		
C224			C92-0513-05	CHIP-TAN 3.3UF 6.3WV		
C225-227			CK73FB1H102K	CHIP C 1000PF K		
C228			C92-0003-05	CHIP TAN 0.47UF 25WV		
C229			CK73FB1E104K	CHIP C 0.10UF K		
C230			CK73FB1H102K	CHIP C 1000PF K		
C231			CK73FB1E104K	CHIP C 0.10UF K		
C233			CK73FB1E104K	CHIP C 0.10UF K		
C234			CK73FB1H102K	CHIP C 1000PF K		
TC1			C05-0345-05	TRIM CAP(10PF)		
CN1			E40-3237-05	PIN CONNECTOR (SP)		
CN2			E40-5183-05	PIN CONNECTOR (DTMF)		
CN3 ,4			E40-5202-05	PIN CONNECTOR (13P)		
CN7 ,8			E40-5328-05	PIN CONNECTOR (3P)		
CN201,202			E40-5203-05	PIN CONNECTOR (13P)		
CN203			E40-3485-05	PIN CONNECTOR (LCD)		
CN204			E40-5187-05	PIN CONNECTOR (OPTION)		
J1			E11-0425-05	PHONE JACK		
J4 ,5			E18-0254-05	SOCKET		
J201			E08-0673-05	RECTANGULAR RECEPTACLE(MIC)		
TP1 ,2			E23-0465-05	TERMINAL		
W1			E33-1902-05	FINISHED WIRE SET(HET)		
			J30-0545-05	SPACER		
CD1			L79-1013-05	CERAMIC DISCRI(CDBM455C16)		
CF1			L72-0372-05	CERAMIC FILTER(CFWM455F)		D
CF1			L72-0372-05	CERAMIC FILTER(CFWM455F)		H
CF1			L72-0376-05	CERAMIC FILTER(CFWM455G)		N
L1 -4			L34-4080-05	COIL		
L5			L34-0956-05	COIL		
L6			L30-0508-05	IFT (21.4MHZ)	K2M2	
L6			L34-4191-05	COIL (34.4MHZ)	KM	
L8 ,9			L40-1092-19	SMALL FIXED INDUCTOR (1UH)	KM	
L9			L40-3391-19	SMALL FIXED INDUCTOR (3.3UH)	K2M2	
L10			L34-1239-05	COIL		
L11			L34-0895-05	COIL	KM	
L12			L34-0742-05	COIL	K2M2	
L12			L34-0894-05	COIL		
L13			L34-0908-05	COIL		
L14 ,15			L34-0499-05	COIL	KM	
L14 ,15			L34-0894-05	COIL	K2M2	
L201			L92-0132-05	FERRITE CHIP COIL		
L202			L92-0132-05	FERRITE CHIP COIL		
X1			L77-1415-05	CRYSTAL RESONATOR(34.855MHZ)	KM	
X1			L77-1416-05	CRYSTAL RESONATOR(21.855MHZ)	K2M2	
X2			L77-1383-05	CRYSTAL RESONATOR(12.8MHZ)		
X201			L77-1435-05	CRYSTAL RESONATOR(12MHZ)		
X202			L77-1397-05	CRYSTAL RESONATOR(4.19MHZ)		
XF1			L71-0244-05	MCF (21.4MHZ)	K2M2	
XF1			L71-0298-05	MCF (34.4MHZ)	KM	D
XF1			L71-0298-05	MCF (34.4MHZ)	KM	H
XF1			L71-0299-05	MCF (34.4MHZ)	M	N

L:Scandinavia K:USA P:Canada
Y:PX(Far East, Hawaii) T:England E:Europe
Y:AAFES(Europe) X:Australia M:Other Areas

D : TK-705D K,K2,M,M2
N : TK-705DN M
H : TK-705DH K,K2,M,M2

⚠ indicates safety critical components

PARTS LIST

* New Parts
Parts without Parts No. are not supplied.
Les articles non mentionnes dans le Parts No. ne sont pas fournis.
Teile ohne Parts No. werden nicht geliefert.

TX-RX UNIT (X57-3860-XX)

Ref. No. 参照番号	Address 位置	New Parts 新	Parts No. 部品番号	Description 部品名／規格	Destination 仕向	Remarks 備考
R1			R92-0670-05	CHIP R 0 OHM		
R2			RK73FB2A104J	CHIP R 100K J 1/10W		
R3			RK73FB2A222J	CHIP R 2.2K J 1/10W		
R4			RK73FB2A330J	CHIP R 33 J 1/10W	K2M2	
R4			R92-0670-05	CHIP R 0 OHM	KM	
R5			RK73FB2A274J	CHIP R 270K J 1/10W		
R6			RK73FB2A101J	CHIP R 100 J 1/10W		
R7			RK73FB2A103J	CHIP R 10K J 1/10W		
R8			RK73FB2A101J	CHIP R 100 J 1/10W		
R9 -11			RK73FB2A104J	CHIP R 100K J 1/10W		
R12			RK73FB2A473J	CHIP R 47K J 1/10W		
R13			R92-0670-05	CHIP R 0 OHM		
R14			RK73FB2A473J	CHIP R 47K J 1/10W		
R15			RK73FB2A470J	CHIP R 47 J 1/10W		
R16			RK73FB2A274J	CHIP R 270K J 1/10W		
R17			RK73FB2A470J	CHIP R 47 J 1/10W		
R18			RK73FB2A104J	CHIP R 100K J 1/10W		
R19			R92-0670-05	CHIP R 0 OHM		
R20			RK73FB2A102J	CHIP R 1.0K J 1/10W		
R21			RK73FB2A101J	CHIP R 100 J 1/10W		
R22			RK73FB2A391J	CHIP R 390 J 1/10W	M	N
R22			RK73FB2A681J	CHIP R 680 J 1/10W	K2M2	
R22			R92-0670-05	CHIP R 0 OHM	KM	D
R22			R92-0670-05	CHIP R 0 OHM	KM	H
R23			RK73FB2A472J	CHIP R 4.7K J 1/10W		
R24			RK73FB2A102J	CHIP R 1.0K J 1/10W	K2M2	
R24			RK73FB2A221J	CHIP R 220 J 1/10W	M	N
R24			RK73FB2A821J	CHIP R 820 J 1/10W	KM	H
R24			RK73FB2A821J	CHIP R 820 J 1/10W	KM	D
R25			RK73FB2A101J	CHIP R 100 J 1/10W		
R26			RK73FB2A224J	CHIP R 220K J 1/10W		
R27			RK73FB2A471J	CHIP R 470 J 1/10W		
R28			R92-0670-05	CHIP R 0 OHM		
R29			R92-0670-05	CHIP R 0 OHM	K2M2	
R30			RK73FB2A153J	CHIP R 15K J 1/10W	KM	
R30			RK73FB2A473J	CHIP R 47K J 1/10W	K2M2	
R31			RK73FB2A104J	CHIP R 100K J 1/10W		
R32			RK73FB2A103J	CHIP R 10K J 1/10W		
R33			RK73FB2A273J	CHIP R 27K J 1/10W		
R34			RK73FB2A103J	CHIP R 10K J 1/10W	M	N
R34			RK73FB2A332J	CHIP R 3.3K J 1/10W	KK2MM2	D
R34			RK73FB2A332J	CHIP R 3.3K J 1/10W	KK2MM2	H
R35			R92-1220-05	FIXED RESISTOR 1 OHM		
R36			RK73FB2A101J	CHIP R 100 J 1/10W	KK2MM2	D
R36			RK73FB2A101J	CHIP R 100 J 1/10W	KK2MM2	H
R36			RK73FB2A680J	CHIP R 68 J 1/10W	M	N
R37			R92-0670-05	CHIP R 0 OHM		
R38			RK73FB2A822J	CHIP R 8.2K J 1/10W		
R39 ,40			RK73FB2A473J	CHIP R 47K J 1/10W		
R41			RK73FB2A333J	CHIP R 33K J 1/10W		
R42			RK73FB2A473J	CHIP R 47K J 1/10W		
R44			RK73FB2A222J	CHIP R 2.2K J 1/10W		
R45			RK73FB2A822J	CHIP R 8.2K J 1/10W		
R46			RK73FB2A222J	CHIP R 2.2K J 1/10W	KK2MM2	D
R46			RK73FB2A222J	CHIP R 2.2K J 1/10W	KK2MM2	H

L:Scandinavia K:USA P:Canada
Y:PX(Far East, Hawaii) T:England E:Europe
Y:AAFES(Europe) X:Australia M:Other Areas

D : TK-705D K,K2,M,M2
N : TK-705DN M
H : TK-705DH K,K2,M,M2

⚠ indicates safety critical components.

PARTS LIST

* New Parts
Parts without Parts No. are not supplied.
Les articles non mentionnes dans le Parts No. ne sont pas fournis.
Teile ohne Parts No. werden nicht geliefert.

TX-RX UNIT (X57-3860-XX)

Ref. No. 参照番号	Address 位置	New Parts 新	Parts No. 部品番号	Description 部品名／規格				Destination 仕向	Remarks 備考
R47			RK73FB2A334J	CHIP R	330K	J	1/10W		
R48			RK73FB2A223J	CHIP R	22K	J	1/10W		
R49			RK73FB2A182J	CHIP R	1.8K	J	1/10W		
R50			RK73FB2A103J	CHIP R	10K	J	1/10W		
R51			RK73FB2A103J	CHIP R	10K	J	1/10W		
R52			RK73FB2A103J	CHIP R	10K	J	1/10W		
R53			RK73FB2A182J	CHIP R	1.8K	J	1/10W		
R54			RK73FB2A223J	CHIP R	22K	J	1/10W		
R55			RK73FB2A473J	CHIP R	47K	J	1/10W		
R57 ,58			RK73FB2A103J	CHIP R	10K	J	1/10W		
R59			RK73FB2A224J	CHIP R	220K	J	1/10W		
R60			RK73FB2A102J	CHIP R	1.0K	J	1/10W		
R61 ,62			RK73FB2A103J	CHIP R	10K	J	1/10W		
R63			RK73FB2A681J	CHIP R	680	J	1/10W		
R64			R92-0670-05	CHIP R	0 OHM				
R65			RK73FB2A103J	CHIP R	10K	J	1/10W	K2M2	
R65			RK73FB2A223J	CHIP R	22K	J	1/10W	KM	
R66			R92-0670-05	CHIP R	0 OHM				
R68			R92-0670-05	CHIP R	0 OHM				
R69			RK73FB2A104J	CHIP R	100K	J	1/10W		
R70			RK73FB2A473F	CHIP R	47K	F	1/10W		
R71			RK73FB2A823F	CHIP R	82K	F	1/10W		
R72			RK73FB2A153F	CHIP R	15K	F	1/10W		
R73			RK73FB2A220J	CHIP R	22	J	1/10W		
R74			R92-0670-05	CHIP R	0 OHM				
R75			RK73FB2A104J	CHIP R	100K	J	1/10W		
R76			RK73FB2A105J	CHIP R	1.0M	J	1/10W		
R77			RK73FB2A102J	CHIP R	1.0K	J	1/10W		
R78			RK73FB2A471J	CHIP R	470	J	1/10W		
R79			R92-0670-05	CHIP R	0 OHM				
R80			RK73FB2A122J	CHIP R	1.2K	J	1/10W		
R81			RK73FB2A220J	CHIP R	22	J	1/10W		
R82			RK73FB2A223J	CHIP R	22K	J	1/10W		
R83			RK73FB2A103J	CHIP R	10K	J	1/10W		
R84 ,85			RK73FB2A101J	CHIP R	100	J	1/10W		
R86 ,87			RK73FB2A102J	CHIP R	1.0K	J	1/10W		
R88			RK73FB2A104J	CHIP R	100K	J	1/10W		
R89			R92-0670-05	CHIP R	0 OHM				
R90			RK73FB2A100J	CHIP R	10	J	1/10W		
R91			RK73FB2A471J	CHIP R	470	J	1/10W	K2M2	D
R92			RK73FB2A120J	CHIP R	12 2	A		K2M2	D
R92			R92-0670-05	CHIP R	0 OHM			KM	
R92			R92-0670-05	CHIP R	0 OHM			K2M2	H
R93			R92-0685-05	CHIP R	22	J	1/2W	K2M2	
R93			R92-0699-05	SOLID	10		1/2W	KM	
R94			RK73FB2A471J	CHIP R	470	J	1/10W	K2M2	D
R95			R92-0670-05	CHIP R	0 OHM				
R96			R92-1215-05	CHIP R	470	J	1/2W		
R97			RK73FB2A103J	CHIP R	10K	J	1/10W		
R98			R92-1213-05	CARBON	100	J	1/2W		
R99 ,100			RK73FB2A223J	CHIP R	22K	J	1/10W		
R101			RK73FB2A100J	CHIP R	10	J	1/10W		
R102			RK73FB2A153J	CHIP R	15K	J	1/10W	K2M2	
R102			RK73FB2A333J	CHIP R	33K	J	1/10W	KM	
R103			RK73FB2A103J	CHIP R	10K	J	1/10W	KM	

L:Scandinavia K:USA P:Canada
Y:PX(Far East, Hawaii) T:England E:Europe
Y:AAFES(Europe) X:Australia M:Other Areas

D : TK-705D K,K2,M,M2
N : TK-705DN M
H : TK-705DH K,K2,M,M2

⚠ indicates safety critical components.

PARTS LIST

* New Parts
Parts without Parts No. are not supplied.
Les articles non mentionnes dans le Parts No. ne sont pas fournis.
Teile ohne Parts No. werden nicht gellefert.

TX-RX UNIT (X57-3860-XX)

Ref. No. 参照番号	Address 位置	New Parts 新	Parts No. 部品番号	Description 部品名／規格	Destination 仕向	Remarks 備考
R103			RK73FB2A473J	CHIP R 47K J 1/10W	K2M2	
R104			R92-0670-05	CHIP R 0 OHM		
R105			RK73FB2A472J	CHIP R 4.7K J 1/10W		
R106			RK73FB2A473J	CHIP R 47K J 1/10W		
R107			R92-0670-05	CHIP R 0 OHM		
R108,109			RK73FB2A472J	CHIP R 4.7K J 1/10W		
R111			RK73FB2A102J	CHIP R 1.0K J 1/10W		
R112			RK73FB2A273J	CHIP R 27K J 1/10W		
R113			R92-0670-05	CHIP R 0 OHM		
R114			RK73FB2A472J	CHIP R 4.7K J 1/10W		
R115			RK73EB2B221J	CHIP R 220 J 1/8W		
R116			RK73FB2A473J	CHIP R 47K J 1/10W		
R117			RK73FB2A273J	CHIP R 27K J 1/10W	KM	
R117			R92-0670-05	CHIP R 0 OHM *	K2M2	
R118			RK73FB2A102J	CHIP R 1.0K J 1/10W		
R202			RK73FB2A473J	CHIP R 47K J 1/10W		
R203			RK73FB2A223J	CHIP R 22K J 1/10W		
R204			RK73FB2A474J	CHIP R 470K J 1/10W		
R205,206			RK73FB2A103J	CHIP R 10K J 1/10W		
R207			RK73FB2A393J	CHIP R 39K J 1/10W		
R208,209			RK73FB2A224J	CHIP R 220K J 1/10W		
R210			RK73FB2A563J	CHIP R 56K J 1/10W		
R211			RK73FB2A103J	CHIP R 10K J 1/10W		
R212			RK73FB2A183J	CHIP R 18K J 1/10W		
R213			RK73FB2A824J	CHIP R 820K J 1/10W		
R214			R92-0670-05	CHIP R 0 OHM		
R216			RK73FB2A682J	CHIP R 6.8K J 1/10W		
R217,218			RK73FB2A103J	CHIP R 10K J 1/10W		
R219			RK73FB2A105J	CHIP R 1.0M J 1/10W		
R220,221			RK73FB2A103J	CHIP R 10K J 1/10W		
R222			R92-0670-05	CHIP R 0 OHM		
R223,224			RK73FB2A223J	CHIP R 22K J 1/10W		
R225,226			RK73FB2A472J	CHIP R 4.7K J 1/10W		
R227-231			RK73FB2A473J	CHIP R 47K J 1/10W		
R232			RK73FB2A472J	CHIP R 4.7K J 1/10W		
R235			RK73FB2A473J	CHIP R 47K J 1/10W	KM	
R237,238			R92-0670-05	CHIP R 0 OHM		
R239			R92-0670-05	CHIP R 0 OHM	K2M2	
R240			R92-0670-05	CHIP R 0 OHM		
R241,242			RK73FB2A473J	CHIP R 47K J 1/10W		
R245-248			RK73FB2A473J	CHIP R 47K J 1/10W		
R249,250			RK73FB2A473J	CHIP R 47K J 1/10W		
R251			RK73FB2A103J	CHIP R 10K J 1/10W		
R252			RK73FB2A473J	CHIP R 47K J 1/10W		
R253,254			RK73FB2A102J	CHIP R 1.0K J 1/10W		
R255,256			RK73FB2A473J	CHIP R 47K J 1/10W		
R257,258			R92-0670-05	CHIP R 0 OHM		
R259			R92-0679-05	CHIP R 0 OHM		
R260,261			RK73FB2A473J	CHIP R 47K J 1/10W		
R262			RK73FB2A103J	CHIP R 10K J 1/10W		
R263			RK73FB2A473J	CHIP R 47K J 1/10W		
R264			RK73FB2A153J	CHIP R 15K J 1/10W		
R265			RK73FB2A682J	CHIP R 6.8K J 1/10W		
R266			RK73FB2A272J	CHIP R 2.7K J 1/10W		
R267			RK73FB2A472J	CHIP R 4.7K J 1/10W		

L:Scandinavia K:USA P:Canada
Y:PX(Far East, Hawaii) T:England E:Europe
Y:AAFES(Europe) X:Australia M:Other Areas

D : TK-705D K,K2,M,M2
N : TK-705DN M
H : TK-705DH K,K2,M,M2

⚠ indicates safety critical components.

PARTS LIST

* New Parts
Parts without Parts No. are not supplied.
Les articles non mentionnes dans le Parts No. ne sont pas fournis.
Teile ohne Parts No. werden nicht geliefert.

TX-RX UNIT (X57-3860-XX)

Ref. No. 参照番号	Address 位置	New Parts 新	Parts No. 部品番号	Description 部品名／規格	Destination 仕向	Remarks 備考
R268			RK73FB2A472J	CHIP R 4.7K J 1/10W		
R269-271			RK73FB2A472J	CHIP R 4.7K J 1/10W		
R279			RK73FB2A473J	CHIP R 47K J 1/10W		
R280			RK73FB2A105J	CHIP R 1.0M J 1/10W		
R281			R92-0670-05	CHIP R 0 OHM		
R284			RK73FB2A472J	CHIP R 4.7K J 1/10W		
R285,286			R92-0670-05	CHIP R 0 OHM		
VR1			R12-3132-05	TRIM POT. 47K		
VR2			R12-6423-05	TRIM POT. 10K		
VR3			R12-6426-05			
VR4			R12-3132-05	TRIM POT. 47K		
VR5			R12-3128-05	TRIM POT. 22K		
VR6			R12-5046-05	TRIM POT. 100K		
VR7			R12-6427-05	TRIM POT. 47K		
VR201			R05-3452-05	POTENTIOMETER(10K.A)		
S201-205			S40-1086-05	TACT SWITCH		
S206			S40-2440-15	PUSH SWITCH (POWER)		
D1			1SV164	DIODE		
D2			1SV164	DIODE	KM	
D3			1SV164	DIODE		
D4			1SV164	DIODE	KM	
D5			1SV164	DIODE	K2M2	
D5			1SV166	DIODE	KM	
D6			1SV164	DIODE	KM	
D7 ,8			1SV164	DIODE		
D9			1SV164	DIODE	K2M2	
D9			1SV166	DIODE	KM	
D10 ,11			1SS184	DIODE		
D12			MA344B	CHIP DIODE		
D13 ,14			1SS184	DIODE		
D15			1SS181	DIODE		
D16			MI407	DIODE		
D17			MI308	DIODE		
D18 ,19			1SS226	DIODE		
D20			DSA3A1	DIODE		
D21			1SS196	DIODE		
D22			MI308	DIODE		
D23			ERZ-M10DK220	SERGE ABSORBER		
D24			1SS181	DIODE		
D202			1SS226	DIODE		
D203			1SS184	DIODE		
D205			MA716	DIODE		
IC1			KCD04	HIC(FM-IF)		
IC2			UPC1241H	IC(AF POWER AMP)		
IC3			KCA03	HIC(MIC AMP)		
IC4			NJM78L05UA	IC(VOLTAGE REGULATOR/ +5V)		
IC5			LA5010M	IC(LOW SATURATION REGULATOR)		
IC6			KCB05	HIC(DRIVE)		
IC7			MC7808CT	IC(VOLTAGE REGULATORS/ +8V)		
IC201,202			NJM4558M	IC(OP AMP X2)		
IC203			78312AGF323-3BE	IC(SIGNALING CPU)		
IC204		*	75112GF-703-3BE	IC(MAIN CPU)		
IC205			CAT35C102KI	IC(EEPROM)		
IC206			L78LR05B-FA	IC(VOLTAGE REGULATOR/+5V)		

L:Scandinavia K:USA P:Canada
Y:PX(Far East, Hawaii) T:England E:Europe
Y:AAFES(Europe) X:Australia M:Other Areas

D : TK-705D K,K2,M,M2
N : TK-705DN M
H : TK-705DH K,K2,M,M2

⚠ indicates safety critical components.

PARTS LIST

* New Parts
Parts without Parts No. are not supplied.
Les articles non mentionnes dans le Parts No. ne sont pas fournis.
Teile ohne Parts No. werden nicht geliefert.

TX-RX UNIT (X57-3860-XX)
PLL (X58-371X-XX)

Ref. No. 参照番号	Address 位置	New Parts 新	Parts No. 部品番号	Description 部品名／規格	Destination 仕向	Remarks 備考
Q1			3SK184(S)	FET		
Q2			3SK131(L)	FET		
Q3			2SC2714(Y)	TRANSISTOR		
Q4			2SD1757K	TRANSISTOR		
Q5 ,6			2SB1119S	TRANSISTOR		
Q7			DTC144WK	DIGITAL TRANSISTOR		
Q8			DTC114WK	DIGITAL TRANSISTOR		
Q9 ,10			2SC2712(Y)	TRANSISTOR		
Q11 ,12			2SD1757K	TRANSISTOR		
Q13			2SC2712(Y)	TRANSISTOR		
Q14			2SK208(Y)	FET		
Q15			2SC2714(Y)	TRANSISTOR		
Q16			2SD1406(Y)	TRANSISTOR		
Q17			2SB1302S	TRANSISTOR		
Q18			DTC114WK	DIGITAL TRANSISTOR		
Q19			DTC144EK	DIGITAL TRANSISTOR		
Q201			DTC144EK	DIGITAL TRANSISTOR		
Q202			DTC114EK	DIGITAL TRANSISTOR		
Q203			2SK208(Y)	FET		
TH1			157-252-55038	THERMISTER (2.5K)		
TH2			157-102-55008	THERMISTER (1K)	KM	
TH2			157-103-55001	THERMISTER (10K)	K2M2	
S207			W02-0866-05	ROTARY ENCORDER		
Z1			X59-3740-11	SUB UNIT(HPF)		
Z2			X58-3710-10	SUB UNIT(PLL)	KM	
Z2			X58-3711-01	SUB UNIT(PLL)	K2M2	
Z3			X59-3130-00	SUB UNIT(APC)		
PLL (X58-371X-XX) 0-10 : K,M 1-01 : K2,M2						
C1			CK73FB1E223K	CHIP C 0.022UF K		
C2 ,3			CK73FB1H102K	CHIP C 1000PF K		
C4			CK73FB1E223K	CHIP C 0.022UF K		
C5			CK73FB1H471K	CHIP C 470PF K		
C6 ,7			C92-0516-05	CHIP TAN 4.7UF 16WV		
C8			C92-0003-05	CHIP TAN 0.47UF 25WV		
C9			CK73EB1E473K	CHIP C 0.047UF K		
C10			CC73FCH1H050C	CHIP C 5PF C		
C11 ,12			CK73FB1H102K	CHIP C 1000PF K		
C13 ,14			CK73FB1E223K	CHIP C 0.022UF K		
C101			CC73GCH1H470J	CHIP C 47PF J	K2M2	
C101			CC73GSL1H221J	CHIP C 220PF J	KM	
C102			CC73GCH1H030C	CHIP C 3PF C	K2M2	
C102			CC73GCH1H1R5C	CHIP C 1.5PF C	KM	
C103,104			CK73GB1E103K	CHIP C 0.010UF K		
C105			CC73GCH1H020C	CHIP C 2.0PF C		
C106			CC73GCH1H220J	CHIP C 22PF J		
C107,108			CK73GB1H102K	CHIP C 1000PF K		
C109			CK73GB1E103K	CHIP C 0.010UF K		
C110			CC73GCH1H330J	CHIP C 33PF J	K2M2	
C110			CC73GSL1H221J	CHIP C 220PF J	KM	
C111			CC73GCH1H010C	CHIP C 1PF C	KM	
C112,113			CK73GB1E103K	CHIP C 0.010UF K		
C114			CC73GCH1H020C	CHIP C 2.0PF C		
C115			CC73GCH1H020C	CHIP C 2.0PF C	K2M2	

L:Scandinavia K:USA P:Canada
Y:PX(Far East, Hawaii) T:England E:Europe
Y:AAFES(Europe) X:Australia M:Other Areas

D : TK-705D K,K2,M,M2
N : TK-705DN M
H : TK-705DH K,K2,M,M2

⚠ indicates safety critical components.

PARTS LIST

× New Parts
Parts without Parts No. are not supplied.
Les articles non mentionnes dans le Parts No. ne sont pas fournis.
Teile ohne Parts No. werden nicht geliefert.

PLL (X58-371X-XX)

Ref. No. 参照番号	Address 位置	New Parts 新	Parts No. 部品番号	Description 部品名／規格	Destination 仕向	Remarks 備考
C116			CK73GB1H102K	CHIP C 1000PF K		
C117			CC73GCH1HR75C	CHIP C 0.75PF C		
C118			CK73GB1H102K	CHIP C 1000PF K		
CN1			E40-5201-05	PIN CONNECTOR (7P)		
CN101			E40-0411-05	PIN CONNECTOR (4P)		
CN102			E40-0311-05	PIN CONNECTOR (3P)		
			F11-1122-14	SHIELDING COVER		
L1			L40-3391-19	SMALL FIXED INDUCTOR (3.3UH)		
L101,102			L40-4791-19	SMALL FIXED INDUCTOR (4.7UH)		
L103			L34-2331-05	COIL 4T		
L104-106			L40-4791-19	SMALL FIXED INDUCTOR (4.7UH)		
L107			L34-2331-05	COIL 4T	K2M2	
L107			L34-2332-05	COIL 3T	KM	
L108			L40-4791-19	SMALL FIXED INDUCTOR (4.7UH)		
L109			L40-1092-19	SMALL FIXED INDUCTOR (1UH)		
R1 -5			RK73GB1J473J	CHIP R 47K J 1/16W		
R6			RK73GB1J152J	CHIP R 1.5K J 1/16W		
R7			RK73GB1J222J	CHIP R 2.2K J 1/16W	KM	
R7			RK73GB1J272J	CHIP R 2.7K J 1/16W	K2M2	
R8			RK73GB1J392J	CHIP R 3.9K J 1/16W		
R9			RK73GB1J222J	CHIP R 2.2K J 1/16W		
R10 ,11			RK73GB1J103J	CHIP R 10K J 1/16W		
R12			RK73GB1J472J	CHIP R 4.7K J 1/16W		
R13			RK73GB1J473J	CHIP R 47K J 1/16W		
R14			RK73GB1J223J	CHIP R 22K J 1/16W		
R15			RK73GB1J103J	CHIP R 10K J 1/16W		
R16			RK73GB1J221J	CHIP R 220 J 1/16W		
R101			RK73GB1J101J	CHIP R 100 J 1/16W		
R102			RK73GB1J470J	CHIP R 47 J 1/16W		
R103			RK73GB1J101J	CHIP R 100 J 1/16W		
R104			RK73GB1J222J	CHIP R 2.2K J 1/16W		
R105			RK73GB1J472J	CHIP R 4.7K J 1/16W		
R106			RK73GB1J471J	CHIP R 470 J 1/16W		
R107			RK73GB1J101J	CHIP R 100 J 1/16W		
R108			RK73GB1J470J	CHIP R 47 J 1/16W		
R109			RK73GB1J183J	CHIP R 18K J 1/16W		
R110			RK73GB1J470J	CHIP R 47 J 1/16W		
R111			RK73GB1J101J	CHIP R 100 J 1/16W		
R112,113			RK73GB1J471J	CHIP R 470 J 1/16W		
R114			RK73GB1J104J	CHIP R 100K J 1/16W		
D101-104			1SV166	DIODE		
D105			1SV164	DIODE		
IC1			M54959FP	IC(FREQ SYNTHESIZER PLL)		
Q1			2SC2713(B)	TRANSISTOR		
Q1			2SC3324(B)	TRANSISTOR		
Q2			2SC3324(B)	TRANSISTOR		
Q2			2SC3324(B)	TRANSISTOR		
Q3			2SC2712(Y)	TRANSISTOR		
Q4			2SC2714(Y)	TRANSISTOR		
Q101			2SK508NV(K52)	FET		
Q102			DTC114EK	DIGITAL TRANSISTOR		
Q103			2SC3120	TRANSISTOR		
Q104			2SK508NV(K52)	FET		

L:Scandinavia K:USA P:Canada
Y:PX(Far East, Hawaii) T:England E:Europe
Y:AAFES(Europe) X:Australia M:Other Areas

D : TK-705D K,K2,M,M2
N : TK-705DN M
H : TK-705DH K,K2,M,M2

⚠ indicates safety critical components.

PARTS LIST

* New Parts
Parts without Parts No. are not supplied.
Les articles non mentionnes dans le Parts No. ne sont pas fournis
Teile ohne Parts No. werden nicht geliefert.

PLL (X58-371X-XX)
APC (X59-3130-00)
HPF (X59-3740-11)

Ref. No. 参照番号	Address 位置	New Parts 新	Parts No. 部品番号	Description 部品名／規格			Destination 仕向	Remarks 備考
Q105			0TC114EK	DIGITAL TRANSISTOR				
APC (X59-3130-00)								
C1			CK73FB1H102K	CHIP C	1000PF	K		
C2			C92-0501-05	CHIP-TAN	1.5UF	6.3WV		
C3			CK73FB1H472K	CHIP C	4700PF	K		
C4			CK73FB1H102K	CHIP C	1000PF	K		
C5			CK73FB1H472K	CHIP C	4700PF	K		
C6			CK73FB1H102K	CHIP C	1000PF	K		
			E23-0471-05	TERMINAL				
R1			RD41FB2B222J	CARBON	2.2K	J 1/8W		
R2			RD41FB2B102J	CARBON	1K	J 1/8W		
R3			RD41FB2B152J	CARBON	1.5K	J 1/8W		
R4 ,5			RD41FB2B103J	CARBON	10K	J 1/8W		
R6			RD41FB2B122J	CARBON	1.2K	J 1/8W		
Q1 ,2			FMW1	TRANSISTOR				
Q3			2SA1162(Y)	TRANSISTOR				
HPF (X59-3740-11)								
C1			CK73GB1E223K	CHIP C	0.022UF	K		
C2 ,3			CK73GB1H472K	CHIP C	4700PF	K		
C4 -6			CK73FB1H272K	CHIP C	2700PF	K		
C7			CK73FB1H102K	CHIP C	1000PF	K		
C8			CK73FB1H272K	CHIP C	2700PF	K		
C10			CK73EF1C105Z	CHIP C	1.0UF	Z		
			E23-0471-05	TERMINAL				
R1			RK73GB1J394J	CHIP R	390K	J 1/16W		
R2			RK73GB1J681J	CHIP R	680	J 1/16W		
R3			RK73GB1J332J	CHIP R	3.3K	J 1/16W		
R4			RK73GB1J823J	CHIP R	82K	J 1/16W		
R5			RK73GB1J333J	CHIP R	33K	J 1/16W		
R6 ,7			RK73GB1J824J	CHIP R	820K	J 1/16W		
R8			RK73FB2A184G	CHIP R	180K	G 1/10W		
R9			RK73FB2A564G	CHIP R	560K	G 1/10W		
R10			RK73FB2A154G	CHIP R	150K	G 1/10W		
R16			RK73GB1J122J	CHIP R	1.2K	J 1/16W		
R17			R92-0670-05	CHIP R	0 OHM			
IC1			NJM4558M	IC(OP AMP X2)				
Q1			2SC2712(Y)	TRANSISTOR				

L:Scandinavia K:USA P:Canada
Y:PX(Far East, Hawaii) T:England E:Europe
Y:AAFES(Europe) X:Australia M:Other Areas

D : TK-705D K,K2,M,M2
N : TK-705DN M
H : TK-705DH K,K2,M,M2

⚠ indicates safety critical components

EXPLODED VIEW

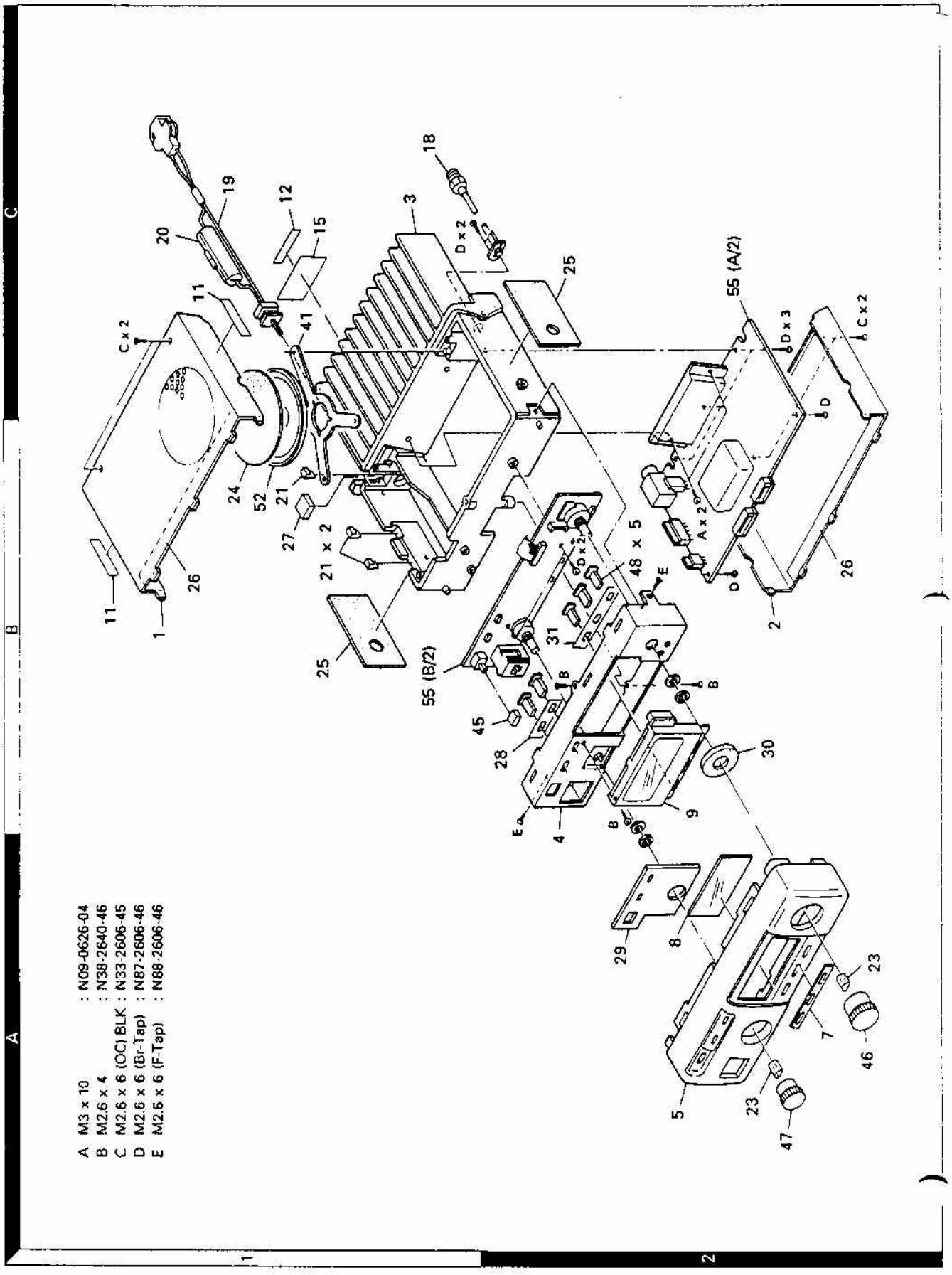

PACKING

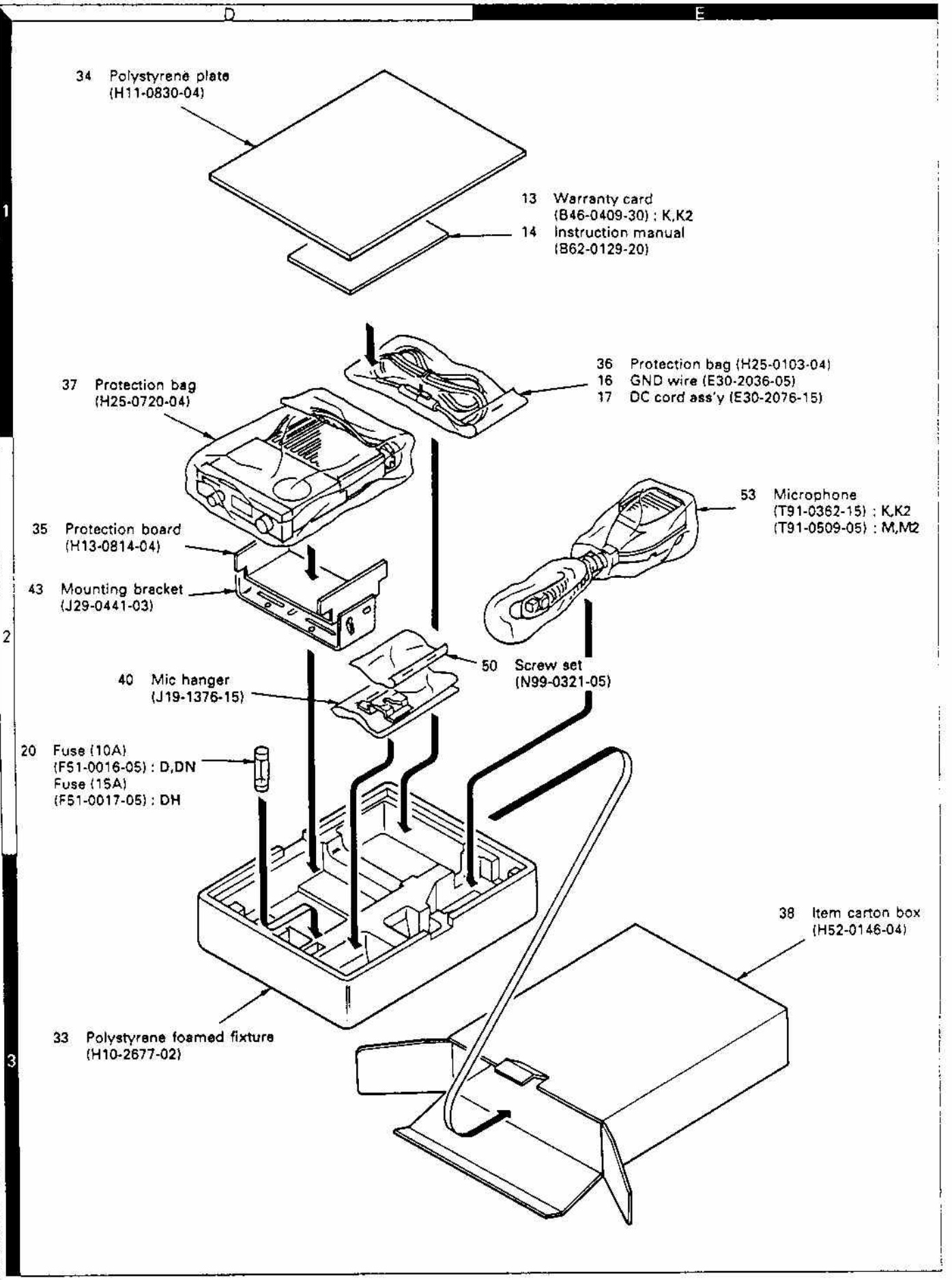
D
E
1
2
3
34 Polystyrene plate
(H11-0830-04)
13 Warranty card
(B46-0409-30) : K,K2
14 Instruction manual
(B62-0129-20)
36 Protection bag (H25-0103-04)
16 GND wire (E30-2036-05)
17 DC cord ass'y (E30-2076-15)
37 Protection bag
(H25-0720-04)
53 Microphone
(T91-0362-15) : K,K2
(T91-0509-05) : M,M2
35 Protection board
(H13-0814-04)
43 Mounting bracket
(J29-0441-03)
50 Screw set
(N99-0321-05)
40 Mic hanger
(J19-1376-15)
20 Fuse (10A)
(F51-0016-05) : D,DN
Fuse (15A)
(F51-0017-05) : DH
38 Item carton box
(H52-0146-04)
33 Polystyrene foamed fixture
(H10-2677-02)

TK-705D/DN/DH

ADJUSTMENT

Test Equipment Required for Alignment

No.	Test Equipment	Major Specifications	
1	Standard Signal Generator (SSG)	Frequency Range Modulation Output	130 to 174MHz. Frequency modulation and external modulation. 0.1μV to greater than 1mV.
2	Power Meter	Input Impedance Operation Frequency Measurement Capability	50Ω. 130 to 174MHz or more. Vicinity of 60W.
3	Deviation Meter	Frequency Range	100 to 500MHz.
4	Digital Volt Meter (DVM)	Measuring Range Accuracy	1 to 30V DC. High input impedance for minimum circuit loading.
5	Oscilloscope		DC through 30MHz.
6	High Sensitivity Frequency Counter	Frequency Range Frequency Stability	10Hz to 500MHz. 0.2ppm or less.
7	Ammeter		15A.
8	AF Volt Meter (AFVTVM)	Frequency Range Voltage Range	50Hz to 10kHz. 3mV to 3V.
9	Audio Generator (AG)	Frequency Range Output	50Hz to 5kHz or more. 0 to 1V.
10	Distortion Meter	Capability Input Level	3% or less at 1kHz. 50mV to 10Vrms.
11	Voltmeter	Measuring Range Input Impedance	1.5 to 30V DC or less. 50kΩ/V or greater
12	4Ω Dummy Load		Approx. 4Ω, 3W.
13	Regulated Power Supply		13.6V, approx. 15A (adjustable from 9 to 17V). Useful if ammeter equipped.

The set has been adjusted for the frequencies shown in the following table. When required, re-adjust them following the adjustment procedure to obtain the frequencies you want in actual operation.

	RX freq' fR( ) MHz			TX freq' fT( ) MHz		
	L	M	H	L	M	H
K,M	150.050	162.050	173.950	150.000	162.000	173.9
K2,M2	136.050	143.050	149.950	136.000	143.000	149.9

L : Low freq' M : Mid freq' H : Hi freq'

MIC connector front view

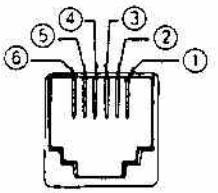

① SB
② PTTG
③ PTT
④ MICG
⑤ MIC
⑥ HOOK

- **The following test cables are recommended.**

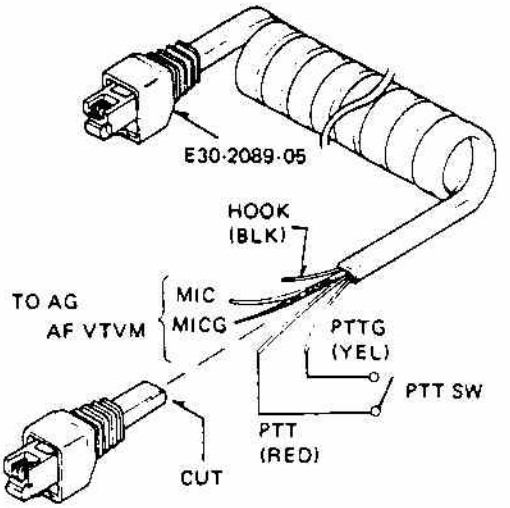

Test cable for Microphone input

ADJUSTMENT

Common Section Adjustment

Item		Condition	Measurement			Adjustment			Specifications/Remarks
			Test-equipment	Unit	Terminal	Unit	Parts	Method	
1. Setting		1) Write in freq' and signaling data with EEPROM writer. Source voltage : DC 13.6V POWER SW : OFF VOL VR : Full counterclockwise (CCW). TX-RX unit VR1, 5 : CCW VR2-4, 6, 7 : Center	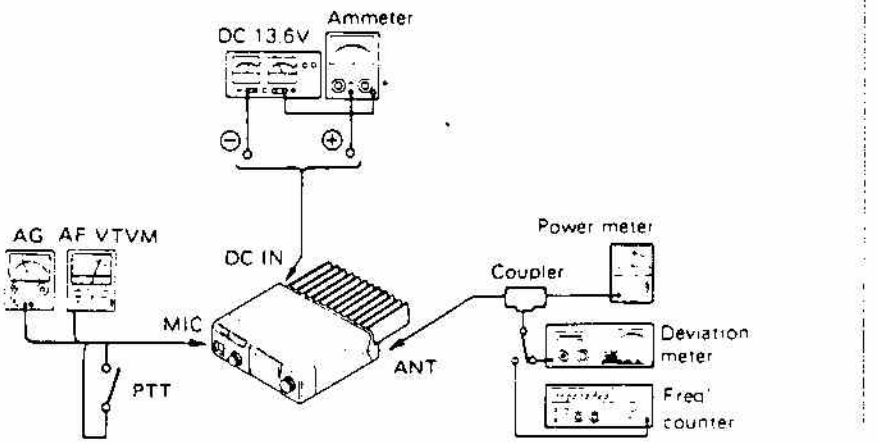						
2. PLL	RX	1) CH : Channel with lowest RX FREQ' (f_{RL}).	DVM	TX-RX	TP2			Check	1.5V or more
		2) CH : Channel with highest RX FREQ' (f_{RH}).	Dummy	Rear panel	ANT				9.0V or less
	TX	3) CH : Channel with lowest TX FREQ' (f_{TL}). PTT : ON							1.5V or more
		4) CH : Channel with highest TX FREQ' (f_{TH}). PTT : ON							9.0V or less
3. Transmit frequency adjustment		1) CH : Channel with TX center FREQ' (f_{TM}). PTT : ON	f. counter Power meter	Rear panel	ANT	TX-RX	TC1	Freq' adj. of TX.	±100Hz
		2) CH : Check other channel PTT : ON						Check	

Receiver Section Adjustment

Item	Condition	Measurement			Adjustment			Specifications/Remarks
		Test-equipment	Unit	Terminal	Unit	Parts	Method	
1. BPF	1) CH : Channel with lowest RX FREQ' (f_{RL}). **K,M** CH : Channel with RX center FREQ' (f_{RM}). **K2,M2** SSG output : 0.5µV/-113dBm MOD : 1kHz DEV : ±3kHz **D,DH** ±1.5kHz **DN** MONI SW (🔊 / ∿) : OFF	DC V.M	TX-RX	TP1	TX-RX	L1-5	Repeat for MAX.	
2. Distortion	1) CH : Channel with RX center FREQ' (f_{RM}). SSG output : 501µV/-53dBm MOD : 1kHz DEV : ±3kHz **D,DH** ±1.5kHz **DN**	Distortion meter Oscilloscope	Rear panel	SP	TX-RX	L6	Minimize the distortion. **K,K2,M,M2** Then rotate the core counterclockwise one turn. **K,M**	

TK-705D/DN/DH

ADJUSTMENT

Item	Condition	Measurement			Adjustment			Specifications/Remarks
		Test equipment	Unit	Terminal	Unit	Parts	Method	
3 Receiving sensitivity	1) CH : Channel with lowest RX FREQ' (f_{RL}), channel with RX center FREQ' (f_{RM}) and channel with highest RX FREQ' (f_{RH}). SSG output : 0.25μV/-119dBm MOD : 1kHz DEV : ±3kHz **D,DH** ±1.5kHz **DN** MONI SW : OFF	AF V.M Oscilloscope	Rear panel	SP			Check	SINAD 12dB or more.
4 Squelch	1) CH : Channel with RX center FREQ' (f_{RM}). MONI SW : ON SSG output : Turn the SSG output 3dB down so that the SINAD sensitivity becomes 12dB.	LCD			TX-RX	VR1	Set to the point at which squelch just close.	Busy indicator ( ) should off.
	2) SSG output : OFF						Check	Squelch should close
	3) SSG output : Sensitivity value of 12dB SINAD.							Squelch should open.
5 Check decoder sensitivity for signaling squelch	1) CH : Set the channel selector to the channel with which QT, DQT is used. SSG FREQ' : Set it to the FREQ' of the channel mentioned above. SSG output : Turn the SSG output so that the SINAD sensitivity becomes 10dB.							
	2) SSG MOD SW : EXT. MOD AG1 FREQ' : 1kHz AG2 FREQ' : QT tone freq' or DQT code							
	3) AG1 : Power switch OFF AG2 output : Adjust the output level of AG2 so that the SSG deviation becomes 0.75kHz **D,DH** 0.37kHz **DN**							
	4) AG1 : Power switch ON AG1 output : Adjust the output level of AG1 so that the SSG deviation becomes 3.75kHz **D,DH** 1.87kHz **DN** (i.e., QT tone frequency or DQT code/0.75kHz deviation, +1kHz/3kHz deviation) MIC hook : ON hook MONI SW : OFF		Rear panel	EXT. SP			Check	Open

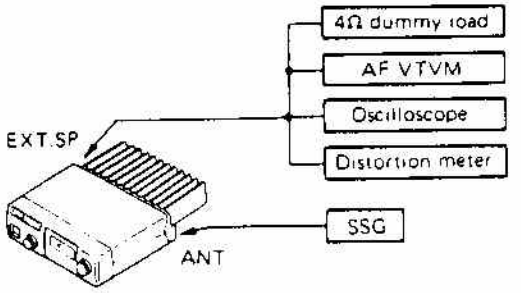

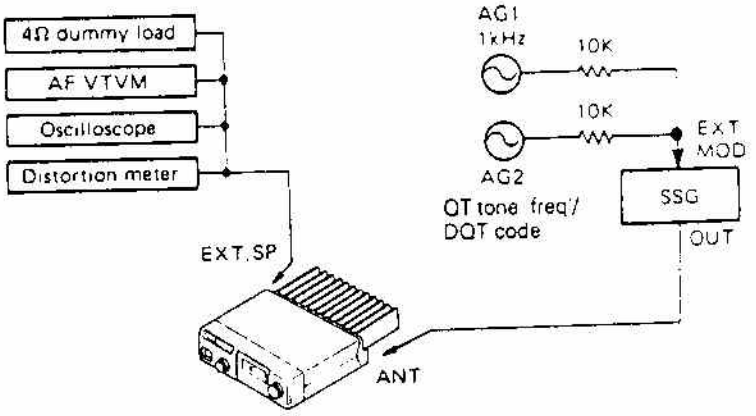

Transmitter Section Adjustment

Item	Condition	Measurement			Adjustment			Specifications/Remarks
		Test-equipment	Unit	Terminal	Unit	Parts	Method	
1. APC	1) CH : Channel with TC center FREQ' (f_{TM}). PTT : ON	Power meter Ammeter	Rear panel	ANT			Check	30W or more. D,DN 46W or more DH
								TX indicator ( ) on
					TX-RX	VR5	25W±1W, 7.0A or less. D,DN (K,M) 27W±1W, 7.0A or less. D (K2,M2) 45W±1W, 11A or less. DH	
	2) CH : Channel with lowest TX FREQ' (f_{TL}) and channel with highest TX FREQ' (f_{TH}). PTT : ON						Check	20–30W, 7.0A or less. D,DN 36–54W, 11A or less. DH
2. DQT waveform correction	1) CH : Set the channel selector to the channel with which DQT is used. Deviation meter filter HPF : OFF, LPF : 3kHz PTT : ON	Power meter Deviatin meter Oscilloscope	Rear panel	ANT	TX-RX	VR7	Make the de-modulation waveform neat.	
3. QT	1) CH : Set the channel selector to the channel with witch QT is used. Deviation meter filter HPF : 50Hz, LPF : 3kHz De-emphasis : 750μs PTT : ON				TX-RX	VR6	±0.75kHz D,DH ±0.37kHz DN	±50Hz
4. Maximum deviation adjustment	1) AG : 1kHz/50mV at MIC in. Deviation meter filter HPF : OFF, LPF : 15kHz De-emphasis : OFF PTT : ON		Front panel	MIC	TX-RX	VR4	±4.2kHz K,M ±4.0kHz K2,M2 ±2.0kHz DN	±100Hz
MIC sensitivity adjustment	1) AG : 1kHz/5mV at MIC in. PTT : ON				TX-RX	VR3	±3.0kHz D,DH ±1.5kHz DN	±100Hz
6. Protection	1) CH : Channel with lowest TX FREQ' (f_{TL}). ANT : Open PTT : ON	Ammeter					Check	7.0A or less. D,DN 11A or less. DH

Adjustment Point (Top View)

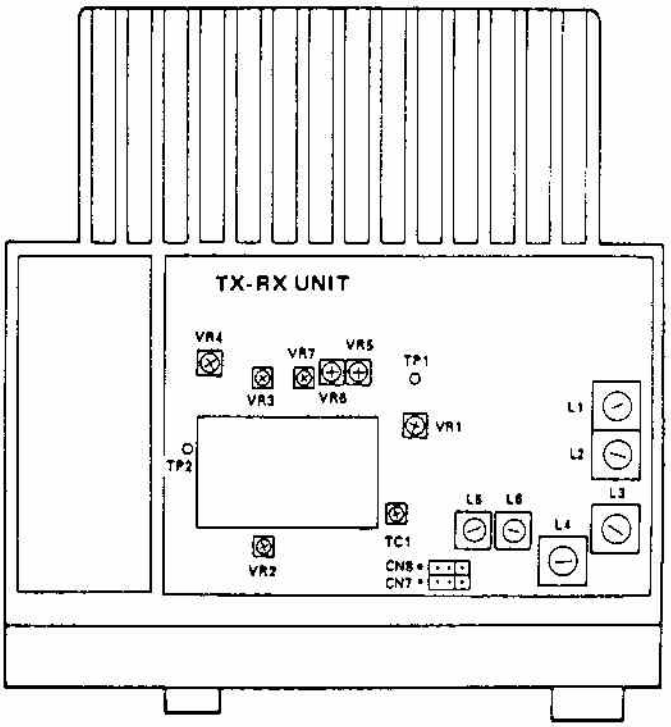

TERMINAL FUNCTIONS

Connector No.	Terminal No.	Terminal Name	Terminal Function
TX-RX UNIT (X57-3860-XX) (A/2)			
CN1	1	SP	Speaker input.
	2	E	GND.
CN2	1	SIG	Pre detection.
	2	ABTO	Transpond tone input during DTMF.
	3	E	GND.
	4	ALERT	Alert tone input during DTMF.
	5	DBD	Deadbeat disable input during DTMF.
	6	MIC MUTE	Pre microphone mute.
CN3	1	E	GND.
	2	EN	PLL enable input.
	3	CK	PLL clock input.
	4	DT	PLL data input.
	5	TX	TX control input.
	6	8C	Common +8V output.
	7	DET	RX detection signal output.
	8	SET	Function select output.
	9	SQ	Squelch adj. level setting output.
	10	UL	Unlock signal output.
	11	NC	Unused.
	12	RAD	RA or RD signal output.
	13	E	GND.
CN4	1	E	GND.
	2	B	+13.6V output.
	3	5C	+5V input (power switch control).
	4	MUTE	AF mute input.
	5	A1	AF signal output.
	6	BEEP	Beep input.
	7	SC	RA output mute control input.
	8	ME	MIC GND input.
	9	MIC	MIC signal input.
	10	TO	Sub tone input.
	11	NC	Unused.
	12	A2	AF signal input.
	13	E	GND.

Connector No.	Terminal No.	Terminal Name	Terminal Function
TX-RX UNIT (X57-3860-XX) (B/2)			
CN201	1	E	GND.
	2	EN	PLL enable output.
	3	CK	PLL clock output.
	4	DT	PLL data output.
	5	TX	TX control output.
	6	8C	Common +8V input.
	7	DET	RX detection signal input.
	8	SET	Function select input.
	9	SQ	Squelch adj. level setting input.
	10	UL	Unlock signal input.
	11	NC	Unused.
	12	RAD	RA or RD signal input.
	13	E	GND.
CN202	1	E	GND.
	2	B	+13.6V input.
	3	5C	+5V output (power switch control).
	4	MUTE	AF mute output.
	5	A1	AF signal input.
	6	BEEP	Beep output.
	7	SC	RA output mute control output.
	8	ME	MIC GND output.
	9	MIC	MIC signal output.
	10	TO	Sub tone output.
	11	NC	Unused.
	12	A2	AF signal output.
	13	E	GND.
CN203	1	CE	Display enable.
	2	DT	Display data.
	3	CK	Display clock.
	4	E	GND.
	5	5C	Common +5V.
	6	8C	Common +8V.
CN204	1	PI1	See page 20.
	2	PO1	
	3	PO2	
	4	PO3	
	5	8C	
	6	PI2	
	7	5C	
	8	E	
	9	RAD	
	10	PO4	

PLL (X58-371X-XX) 0-10 : K,M 1-01 : K2,M2

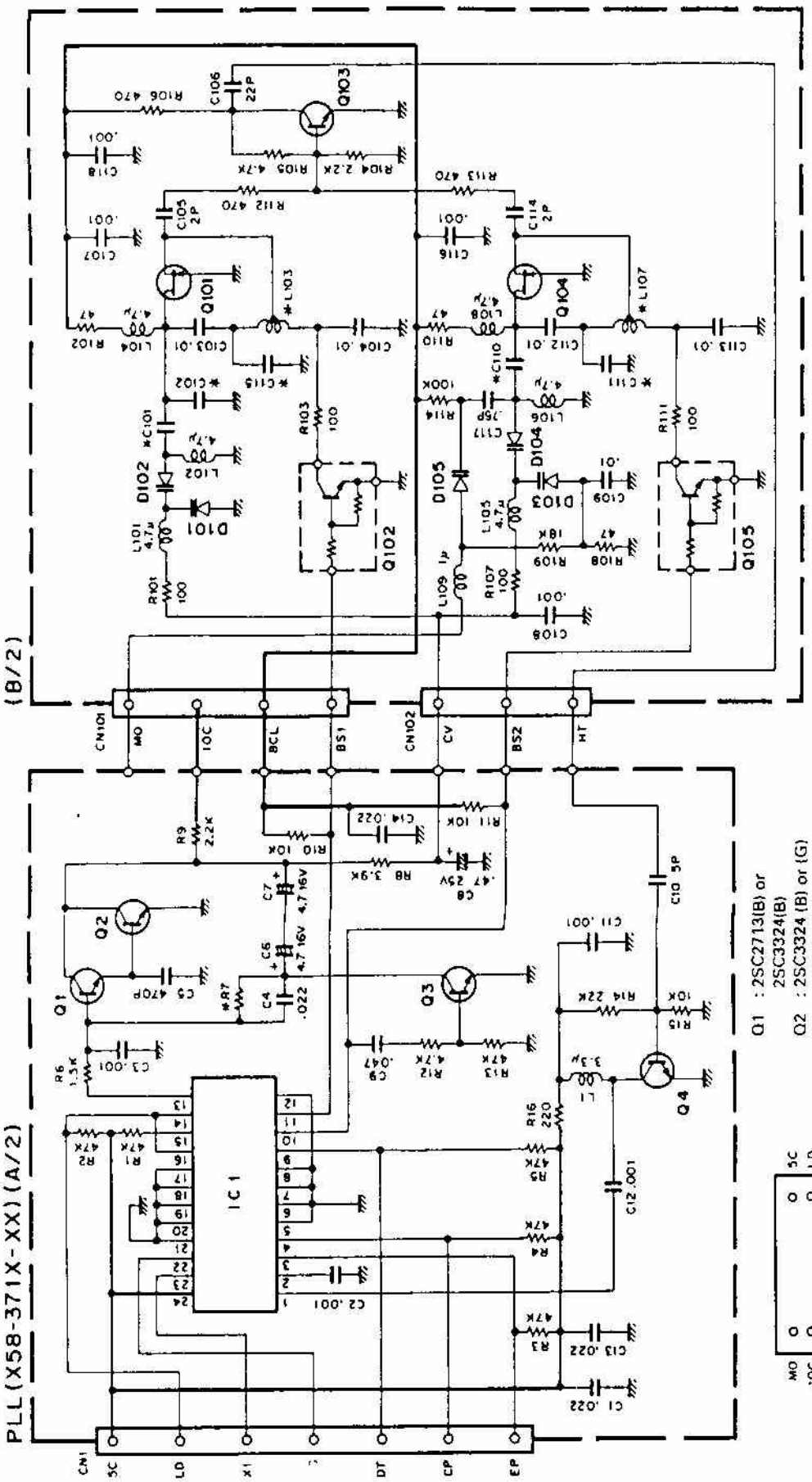

	R7	C101	C102	C110	C111	C115
0-10	2.2K	220P	1.5P	220P	1P	-
1-01	2.7K	47P	3P	33P	-	2P

PLL (X58-371X-XX) (A/2) Component side view

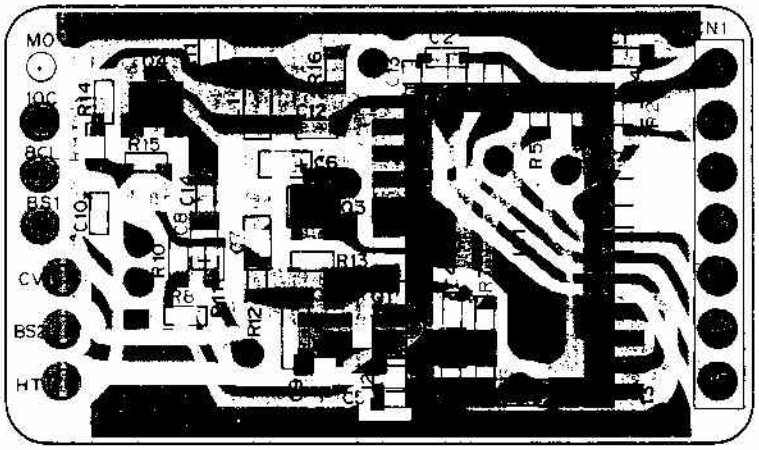

2SC2712
2SC2713
2SC2714
2SC3120
2SC3324
DTC114EK

M54959FP

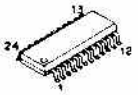

2SK508NV

PLL (X58-371X-XX) (A/2) Foil side view

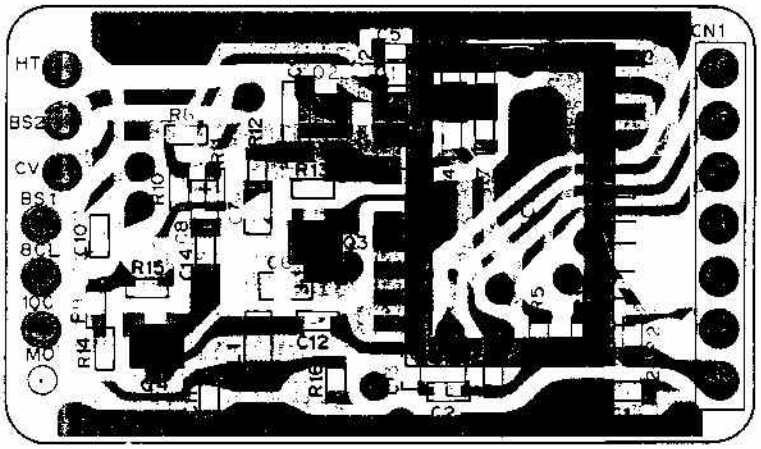

PLL (X58-371X-XX) (B/2) Component side view

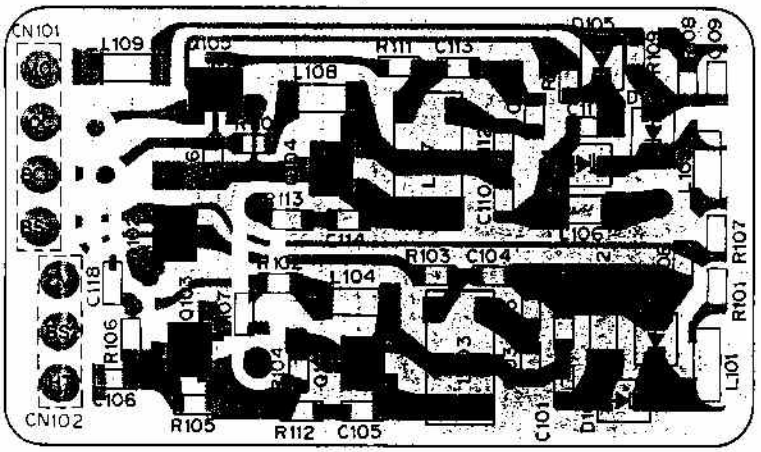

: Component side
: Foil side

CIRCUIT DIAGRAMS/PC BOARD VIEWS TK-705D/DN/DH

APC (X59-3130-00)

APC (X59-3130-00)

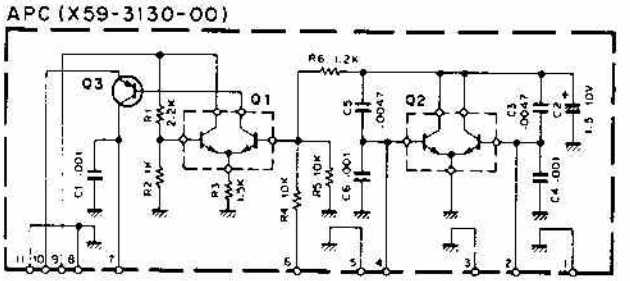

Q1, 2 . FMW-1
Q3 2SA1162(Y)

FMW-1

2SA1162
2SC2712

NJM4558M

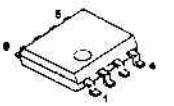

APC (X59-3130-00) Foil side view

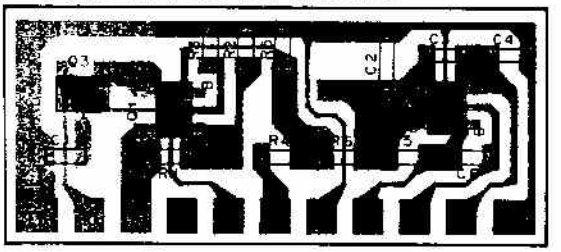

HPF (X59-3740-11)

HPF (X59-3740-11)

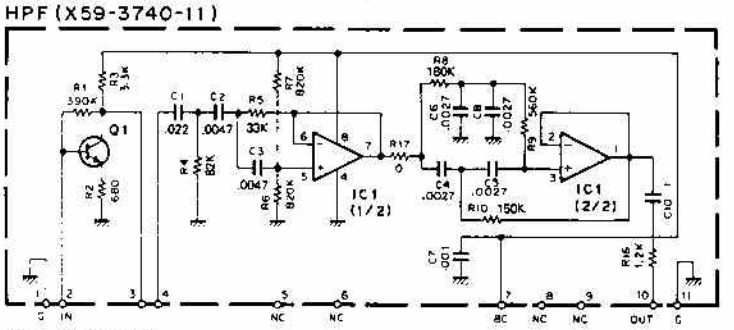

Q1 2SC2712(Y)
IC1 NJM4558M

HPF (X59-3740-11) Foil side view

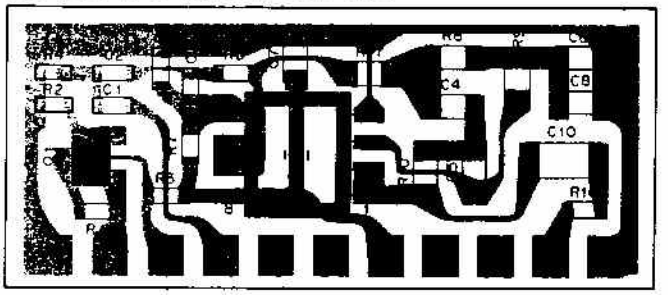

TK-705D/DN/DH PC BOARD VIEWS

TX-RX UNIT (X57-3860-XX) Component side view
-10 : D (K,M) -11 : D (K2,M2) -12 : DH (K,M) -13 : DH (K2,M2) -21 : DN (M)

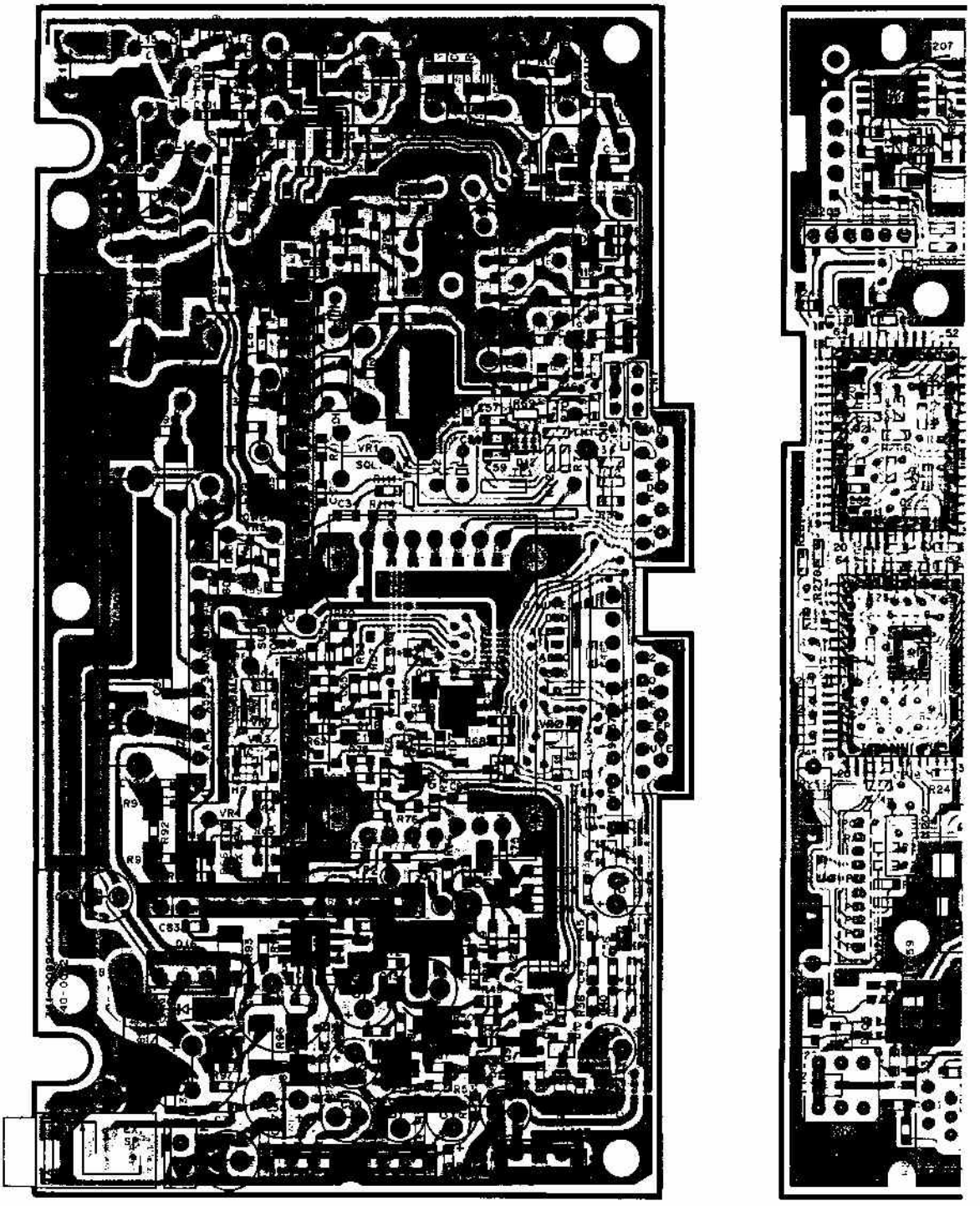

TK-

TX-RX UNIT (X57-3860-XX) Foil side view
-10 : D (K,M) -11 : D (K2,M2) -12 : DH (K,M) -13 : DH (K2,I

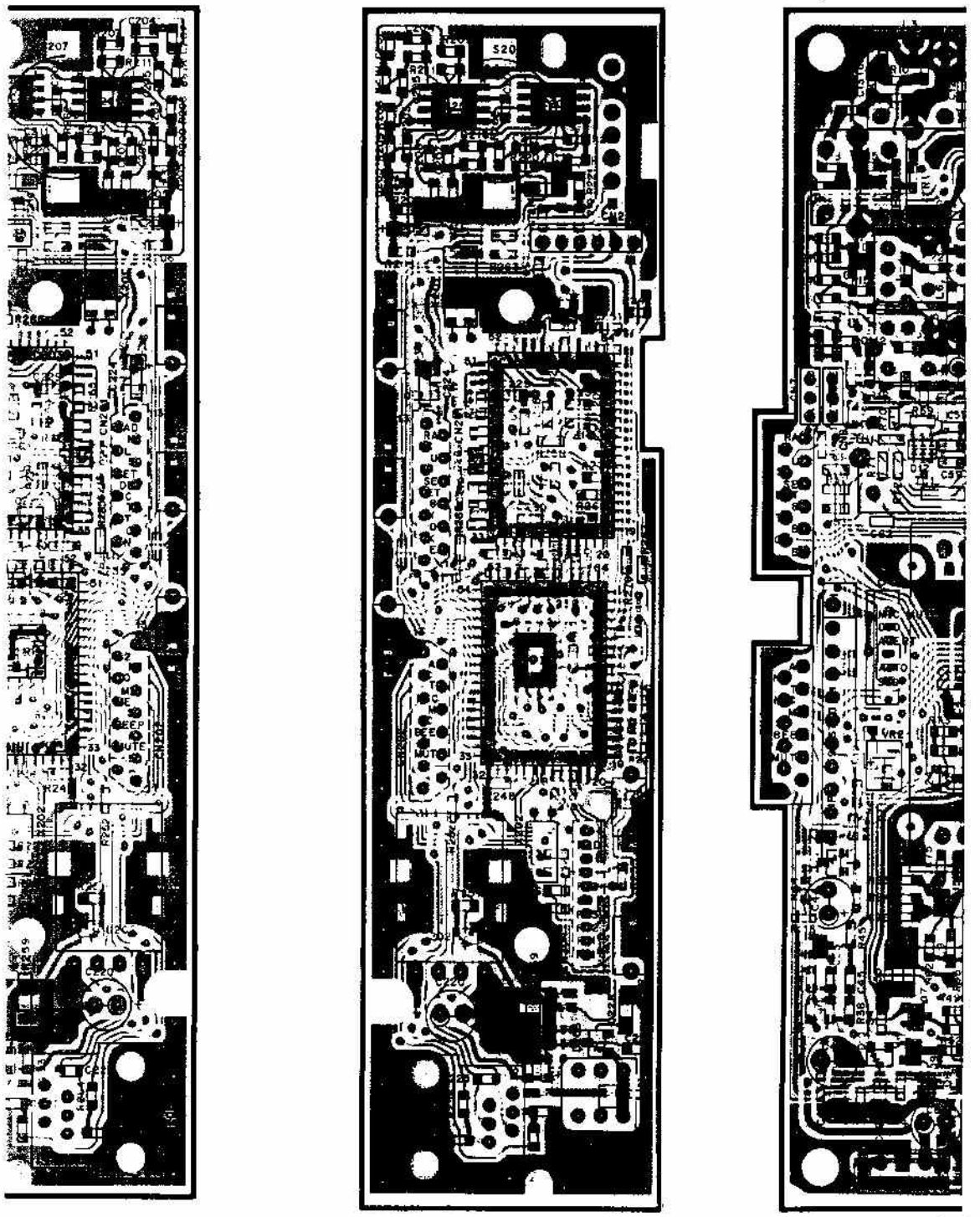

M2) -21 : DN (M)

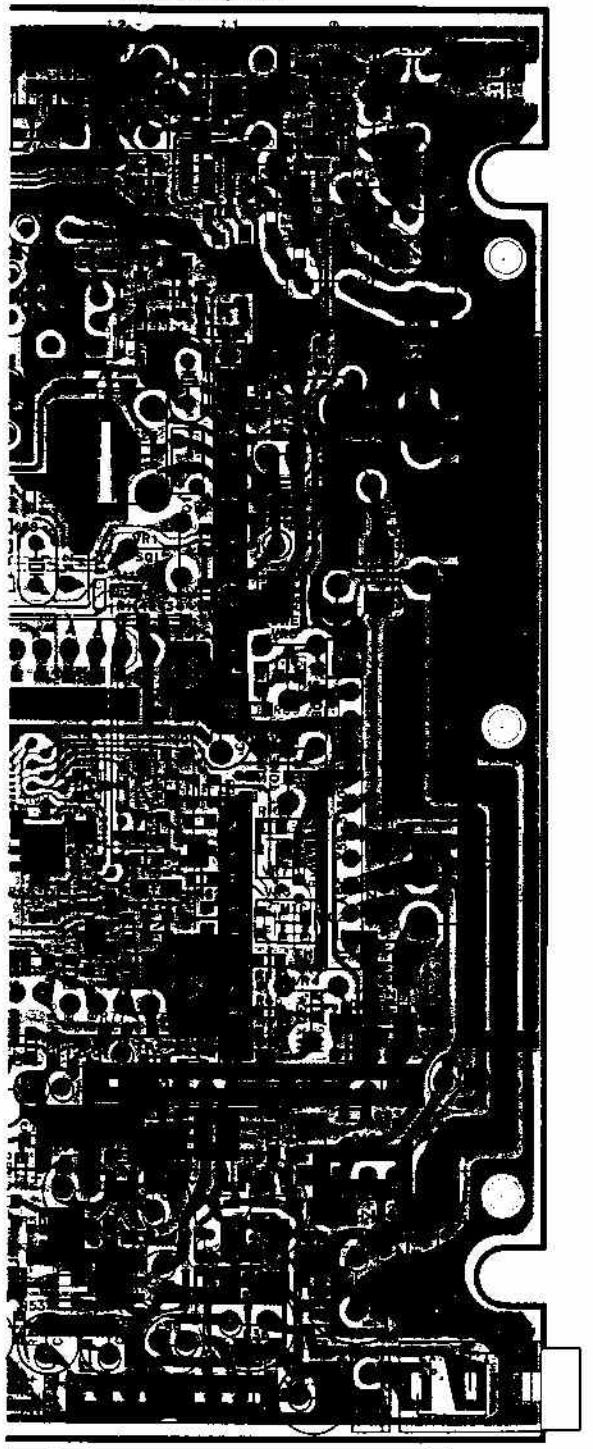

2SC2712
2SC2714
2SD1757K
DTC114EK
DTC114WK
DTC144EK
DTC144WK

2SD1406

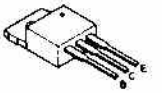

2SB1119S
2SB1302S

2SK208

3SK131
3SK184

NJM78L05UA

L78LR05B-FA

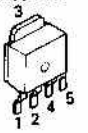

1.INPUT
2.DELAY CAPACITOR
3.GND
4.RESET OUTPUT
5.OUTPUT

MC7808CT

CAT35C102KI

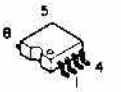

μPC1241H

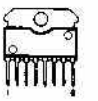

LA5010M
NJM4558M

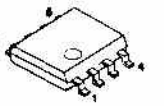

75112GF-703-3BE
78312AGF323-3BE

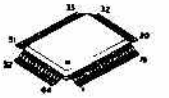

SP

EX.SI

: Component side
: Foil side

X57-386X-XX

	F RANGE (MHz)	IC301	Z2 X-XX	XF1	X1	CF1	C1	C2	C8	C9	C11	C13	C15	C17	C24	C29	C30	C31	C97	C99	C102	C106	C107	C109	C110	C111	C115	C124	R4	R22	R24	R29	R30	R34	R36
0-10	150-174	M67741 H-22	0-10	L71-0298	L77-1415	CFWM455F	3P	NO	33P	NO	3P	NO	.5P	NO	9P	47P	YES	.001	12P	9P	3P	39P	39P	2P	15P	NO	NO	NO	0	0	820	NO	15K	3.3K	100
0-11	136-150	M57741 UL-22	1-01	L71-0244	L77-1416	CFWM455F	4P	YES	22P	YES	4P	YES	2P	YES	7P	33P	NO	82P	18P	22P	2P	47P	47P	4P	22P	NO	YES	NO	33	680	1K	YES	47K	3.3K	100
0-12	150-174	M67781 H	0-10	L71-0298	L77-1415	CFWM455F	3P	NO	33P	NO	3P	NO	.5P	NO	9P	47P	YES	.001	15P	9P	2P	39P	39P	4P	22P	NO	NO	10P	0	0	220	NO	15K	3.3K	100
0-13	136-150	M67781 L	1-01	L71-0244	L77-1416	CFWM455F	4P	YES	22P	YES	4P	YES	2P	YES	7P	33P	NO	82P	18P	22P	2P	47P	47P	4P	22P	YES	YES	8P	33	680	1K	YES	47K	3.3K	100
0-21	150-174	M67741 H-22	0-10	L71-0299	L77-1415	CFWM455G	3P	NO	33P	NO	3P	NO	.5P	NO	22P	47P	YES	.001	12P	9P	3P	39P	39P	2P	15P	NO	NO	NO	0	390	220	NO	15K	10K	68

TX-RX UNIT(X57-386X-XX)(A/2) X-XX 0-10 TK-705D(K,M) 0-11 TK-705D(K2,M2) 0-12 TK-705DH(K,M) 0-21 TK-705DM

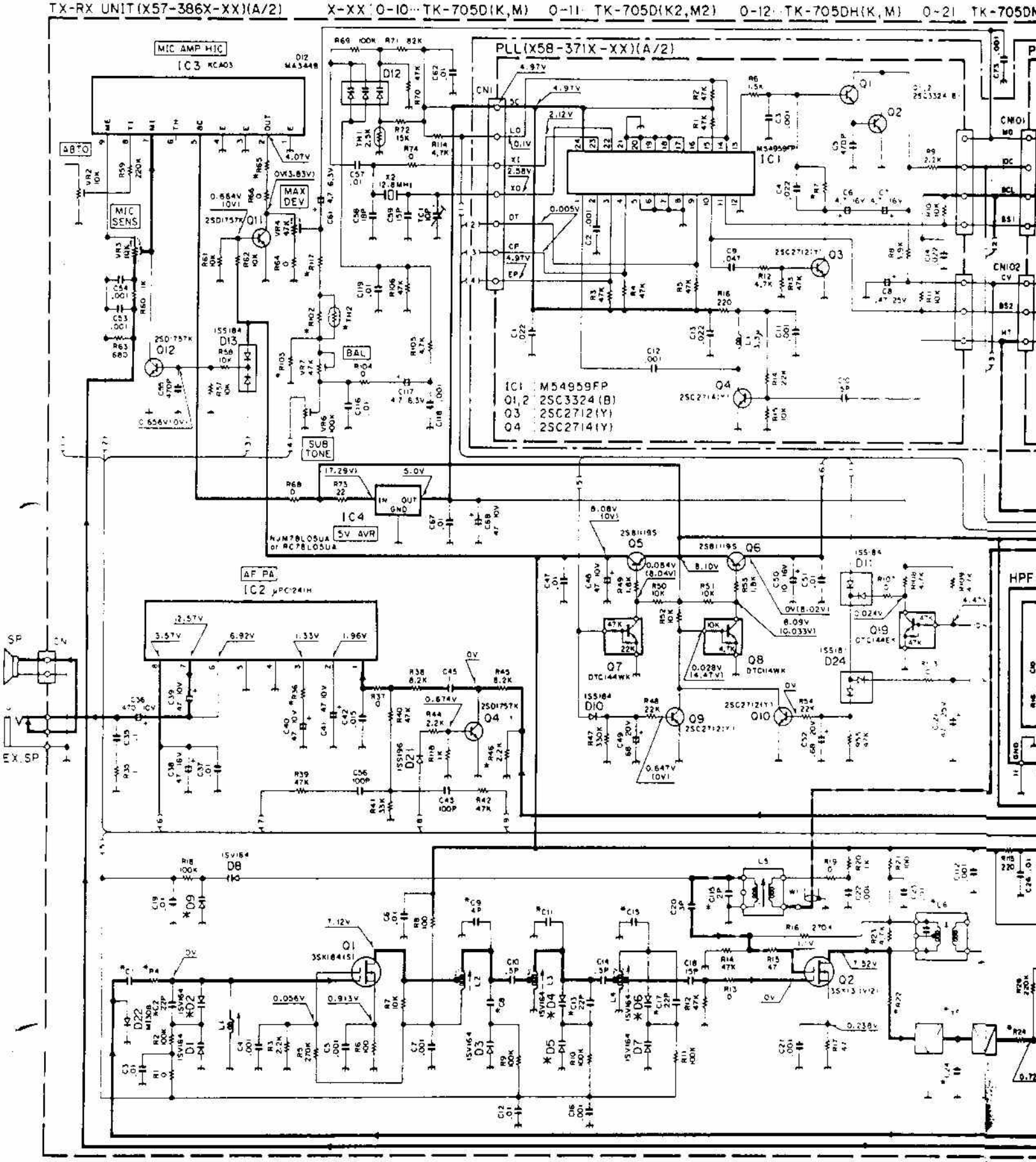

R29	R30	R34	R36	R46	R65	R91	R92	R93	R94	R102	R103	R117	R235	R239	L6	L8	L9	L12	L14	L15	TH2	D2	D4	D5	D6	D9
NO	15K	3.3K	100	YES	22K	NO	0	10	NO	33K	10K	27K	YES	NO	L34-4191	YES	1μ	L34-0742	L34-0499	L34-0499	1K	YES	YES	1SV166	YES	1SV166
YES	47K	3.3K	100	YES	10K	YES	12	22	YES	15K	47K	0	NO	YES	L30-0508	NO	3.3μ	L34-0894	L34-0894	L34-0894	10K	NO	NO	1SV164	NO	1SV164
NO	15K	3.3K	100	YES	22K	NO	0	10	NO	33K	10K	27K	YES	NO	L34-4191	YES	1μ	L34-0742	L34-0499	L34-0499	1K	YES	YES	1SV166	YES	1SV166
YES	47K	3.3K	100	YES	10K	NO	0	22	NO	15K	47K	0	NO	YES	L30-0508	NO	3.3μ	L34-0894	L34-0894	L34-0894	10K	NO	NO	1SV164	NO	1SV164
NO	15K	10K	68	NO	22K	NO	0	10	NO	33K	10K	27K	YES	NO	L34-4191	YES	1μ	L34-0742	L34-0499	L34-0499	1K	YES	YES	1SV166	YES	1SV166

X58-371X-XX

	R7	C101	C102	C110	C111	C115	
0-10	2.2K	220P	15P	220P	YES	NO	24
1-01	2.7K	47P	3P	33P	NO	YES	34

TK-705DN(M) 0-13 TK-705DH(K2,M2)

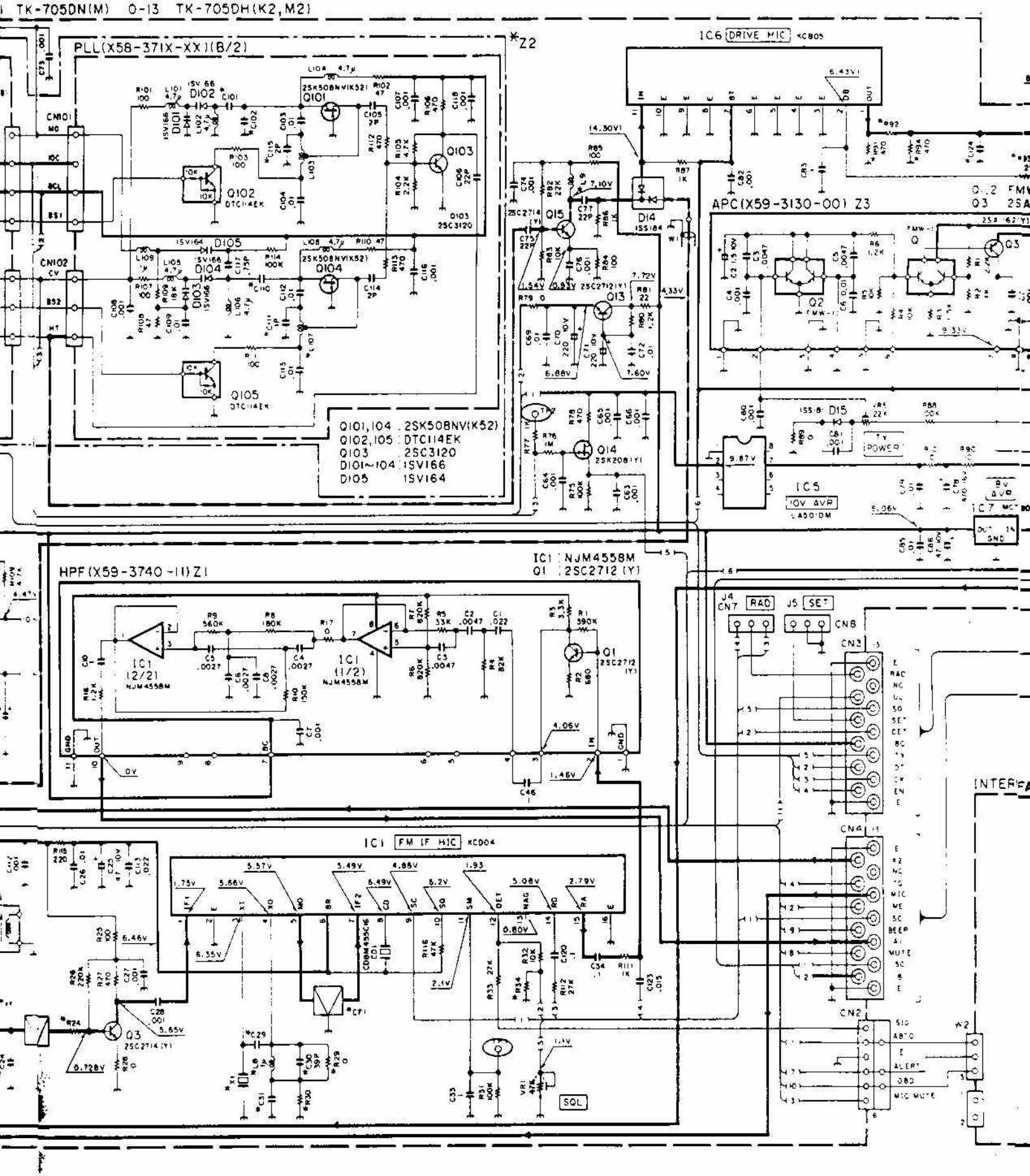

							L107
	220P	5P	220P	YES	NO		34-2331-05
	47P	3P	33P	NO	YES		34-2332-05

IC1	: KCD04
IC2	: μPC1241H
IC3	: KCA03
IC4	: NJM78L05UA or RC78L05UA
IC5	: LA5010M
IC6	: KCB05
IC7	: MC7808CT
IC301	: *

Q1	: 3SK184(S)	D1~4,6~8	: 1S
Q2	: 3SK131(L)	D5,9	: *
Q3,15	: 2SC2714(Y)	D10,11,13,14	: 1S
Q4,11,12	: 2SD1757K	D12	: MA
Q5,6	: 2SB1119S	D15,24	: 1S
Q7	: DTC144WK	D16	: MI
Q8,18	: DTC114WK	D17,22	: MI
Q9,10,13	: 2SC2712(Y)	D18,19	: 1S
Q14	: 2SK208(Y)	D20	: DS
Q16	: 2SD1406(Y)	D21	: 1S
Q17	: 2SB1302S	D23	: ER
Q19	: DTC144EK		

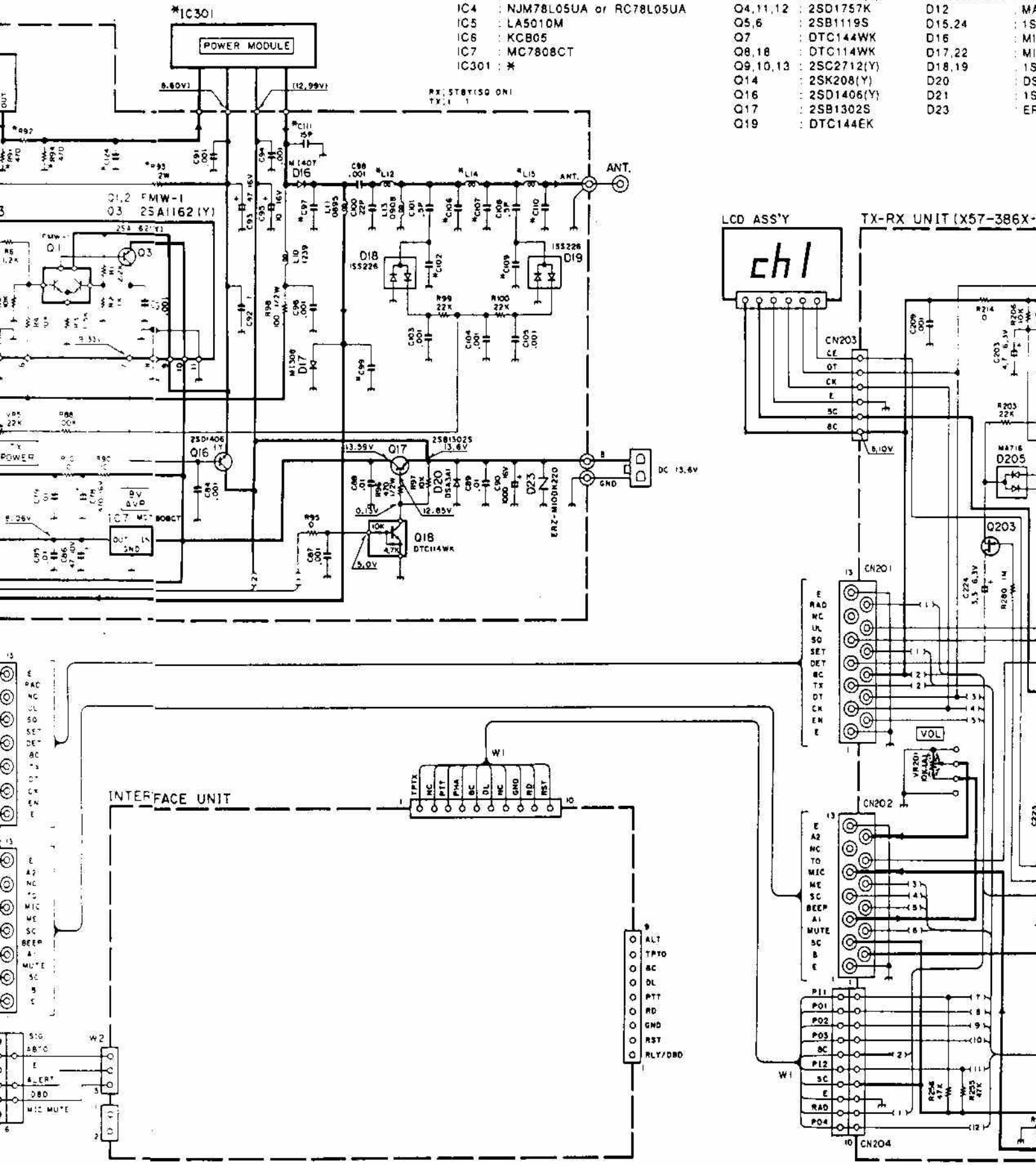

D1-4,6-8	: 1SV164	IC201,202	: NJM4558M
D5,9	: *	IC203	: 78312AGF-323-3BE
D10,11,13,14	: 1SS184	IC204	: 75112GF-703-3BE
D12	: MA344B	IC205	: CAT35C102KI
D15,24	: 1SS181	IC206	: L78LR05B-FA
D16	: MI407		
D17,22	: MI308	Q201	: DTC144EK
D18,19	: 1SS226	Q202	: DTC114EK
D20	: DSA3A1	Q203	: 2SK208(Y)
D21	: 1SS196		
D23	: ERZ-M10DK2200	D202	: 1SS226
		D203	: 1SS184
		D205	: MA716

RX UNIT (X57-386X-XX) (8/2)

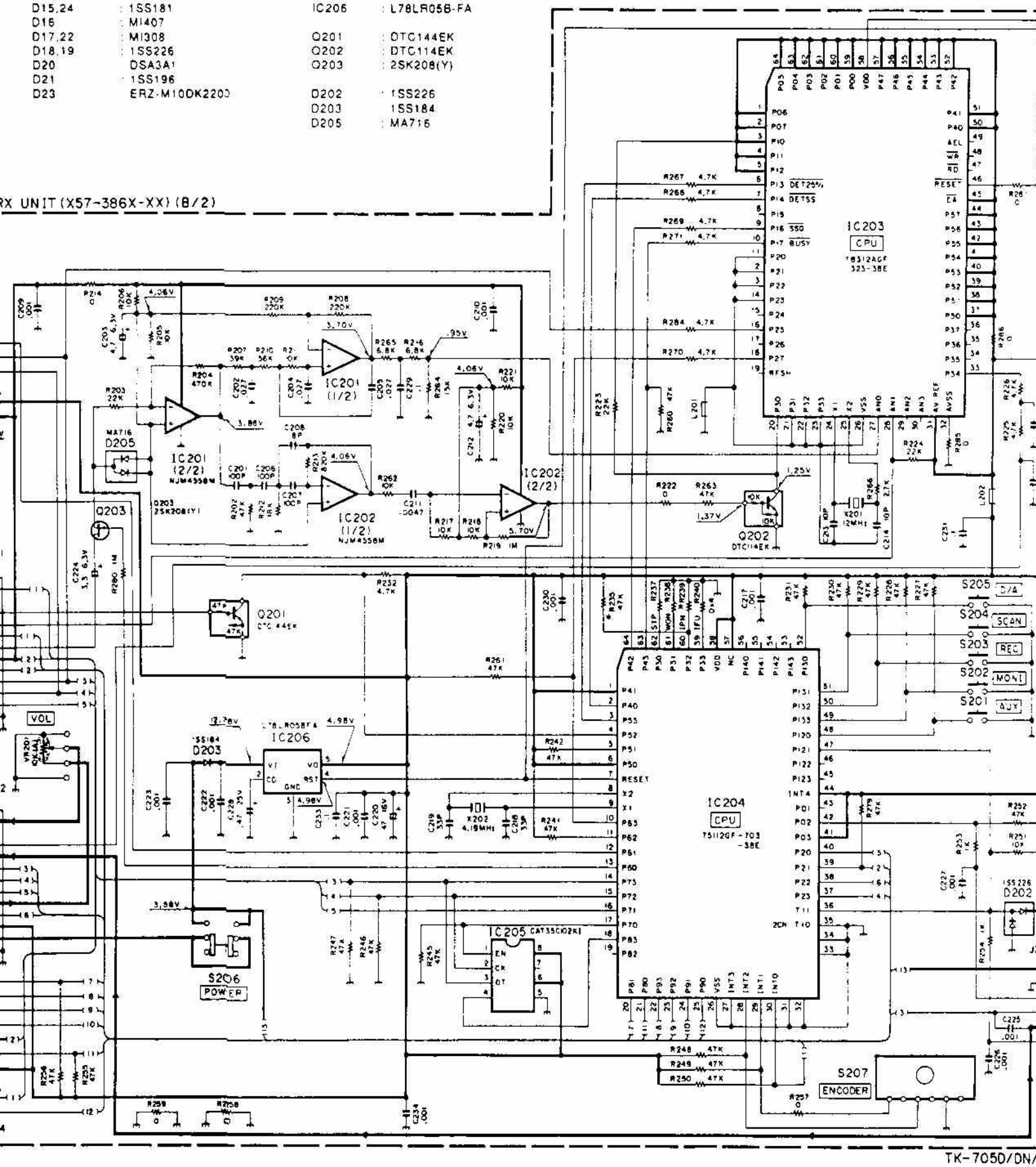

IC201,202 : NJM4558M
IC203 : 78312AGF-323-3BE
IC204 : 75112GF-703-3BE
IC205 : CAT35C102KI
IC206 : L78LR05B-FA

Q201 : DTC144EK
Q202 : DTC114EK
Q203 : 2SK208(Y)

K2200

D202 : 1SS226
D203 : 1SS184
D205 : MA716
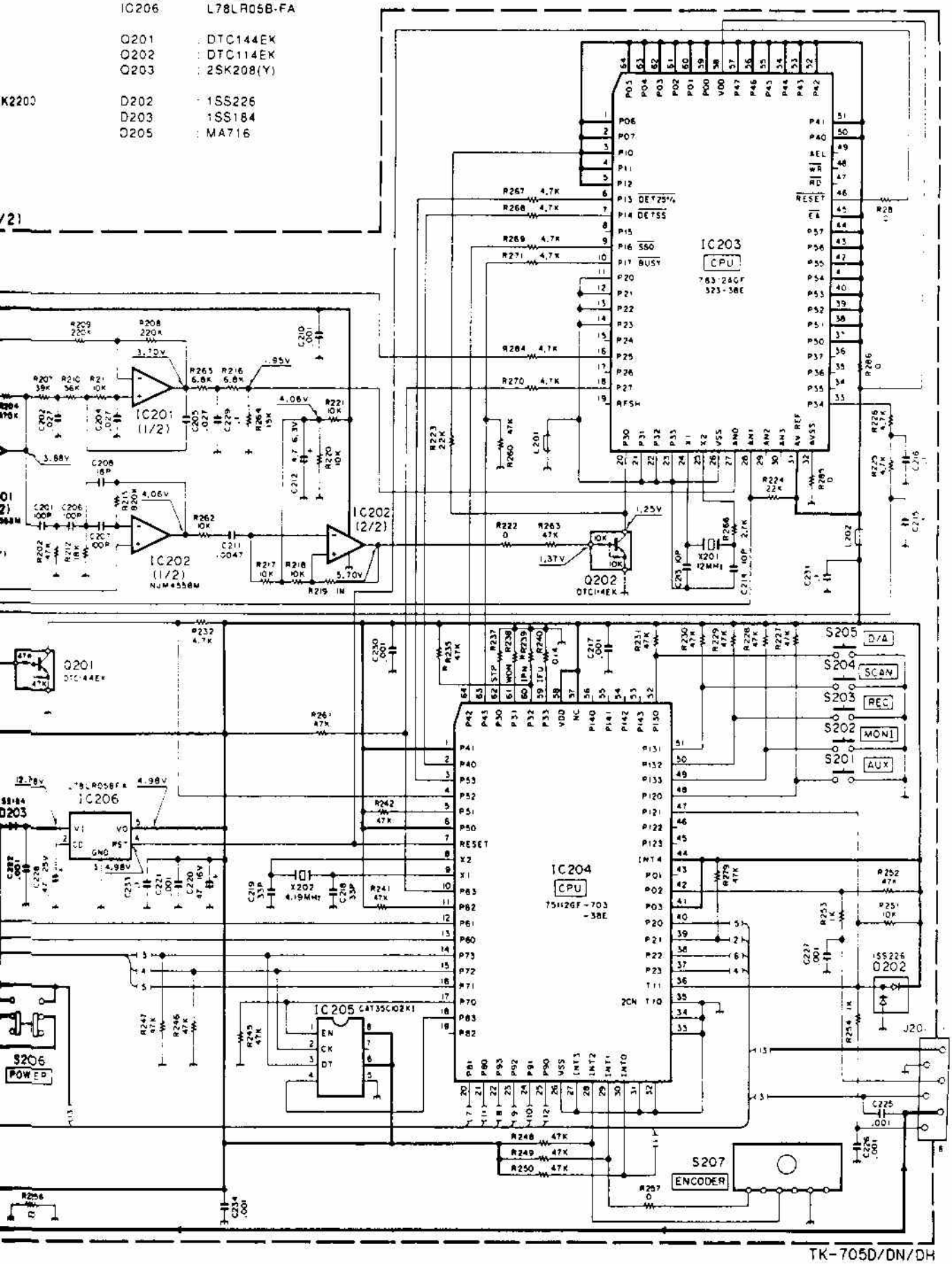
/21